Precision in the Field: The ESP32 Autonomous Sowing Protocol

A technical blueprint for modernizing agricultural labor through wireless automation.

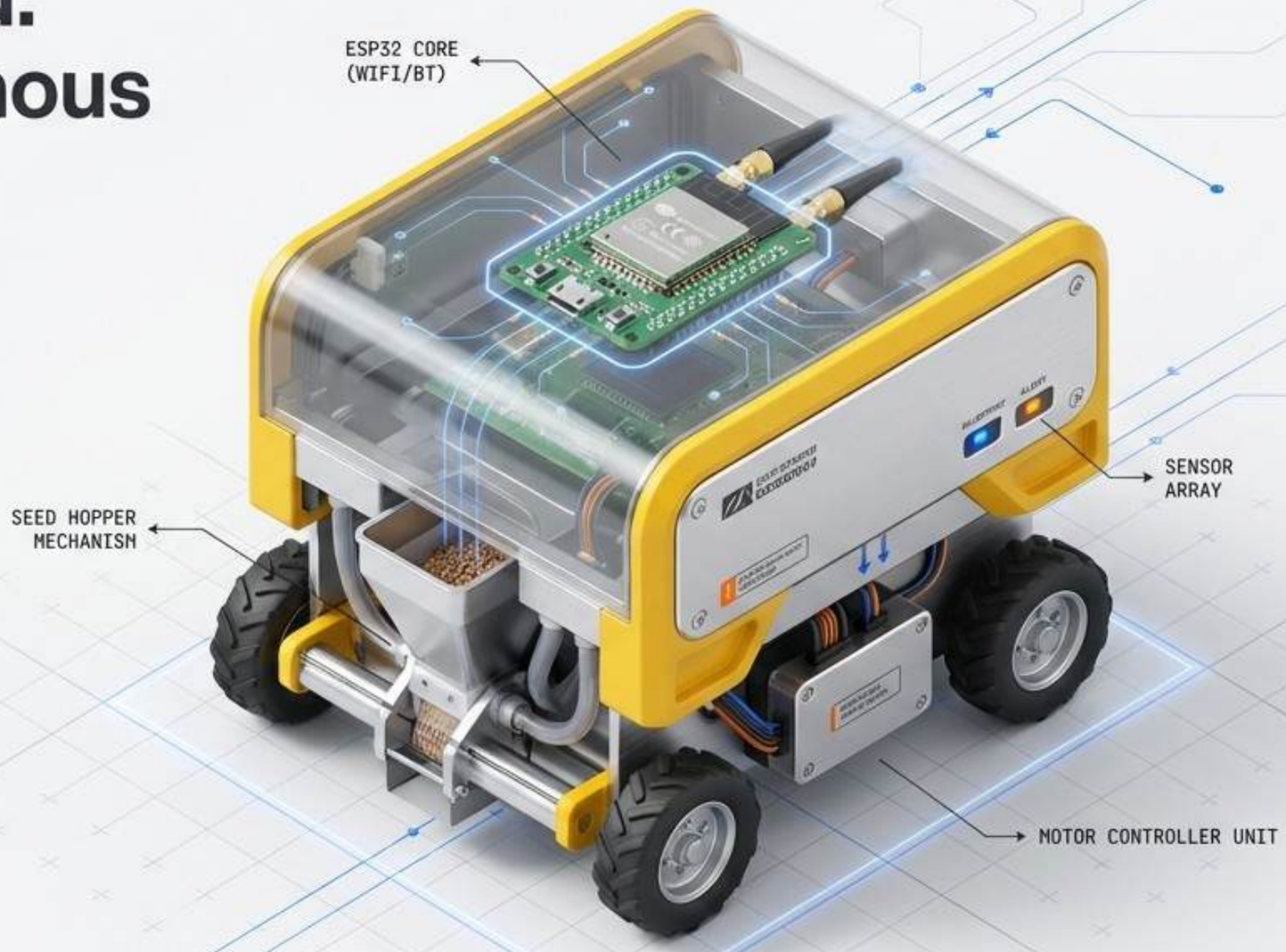

PROJECT:	AUTONOMOUS SOWER
CONTROLLER:	ESP32 DEVKIT V1
CONNECTIVITY:	SOFT-AP (LOCAL WIFI)
STATUS:	PROTOTYPE / OPERATIONAL

The Imperative for Automation

Manual sowing creates bottlenecks in labor, consistency, and yield.

Labor & Fatigue /
Traditional sowing demands immense physical exertion, limiting working hours and causing long-term strain.

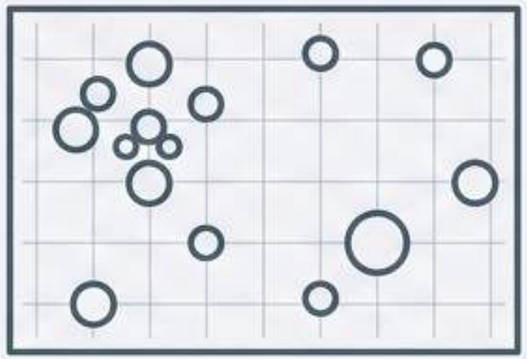

Inconsistency /
Manual dispersion results in uneven seed placement, leading to resource competition between saplings.

Resource Loss /
Lack of flow control causes high rates of seed wastage, increasing overhead costs per acre.

System Architecture

The four pillars of the autonomous sowing unit.

01. THE CONTROLLER /
ESP32 Brain

02. THE CONNECTION /
WiFi SoftAP Interface

04. THE PAYLOAD /
Servo Dispersion System

03. THE DRIVE /
L298N & Locomotion

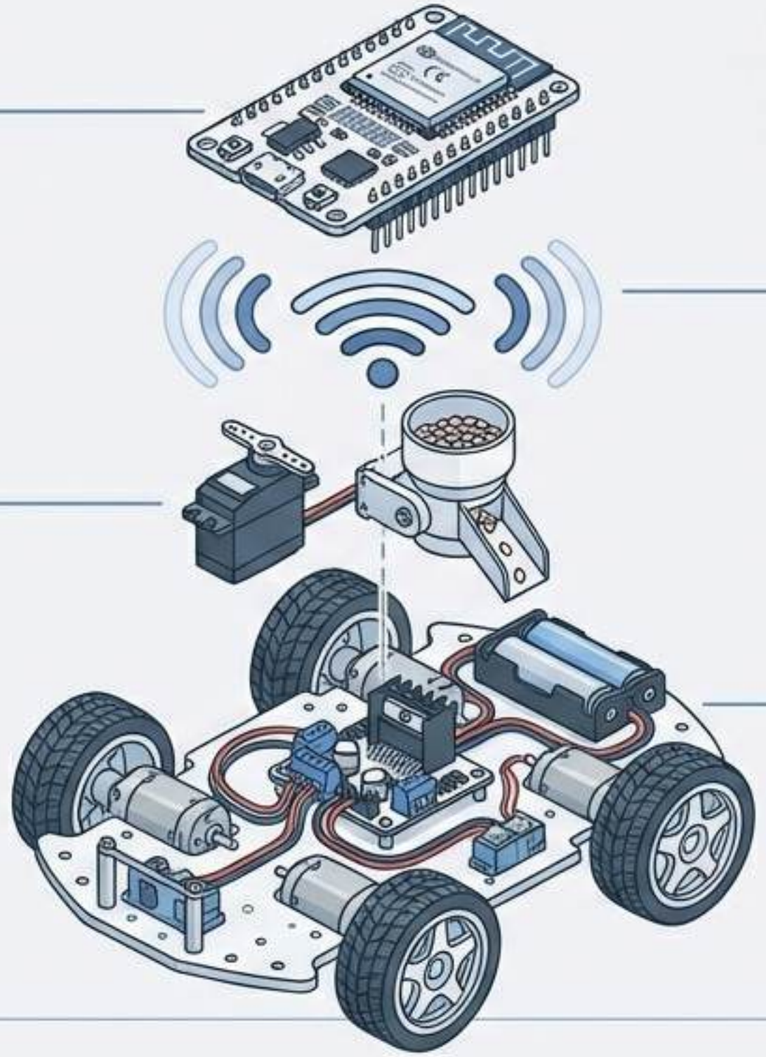

Engineering Editorial

The Central Nervous System: ESP32

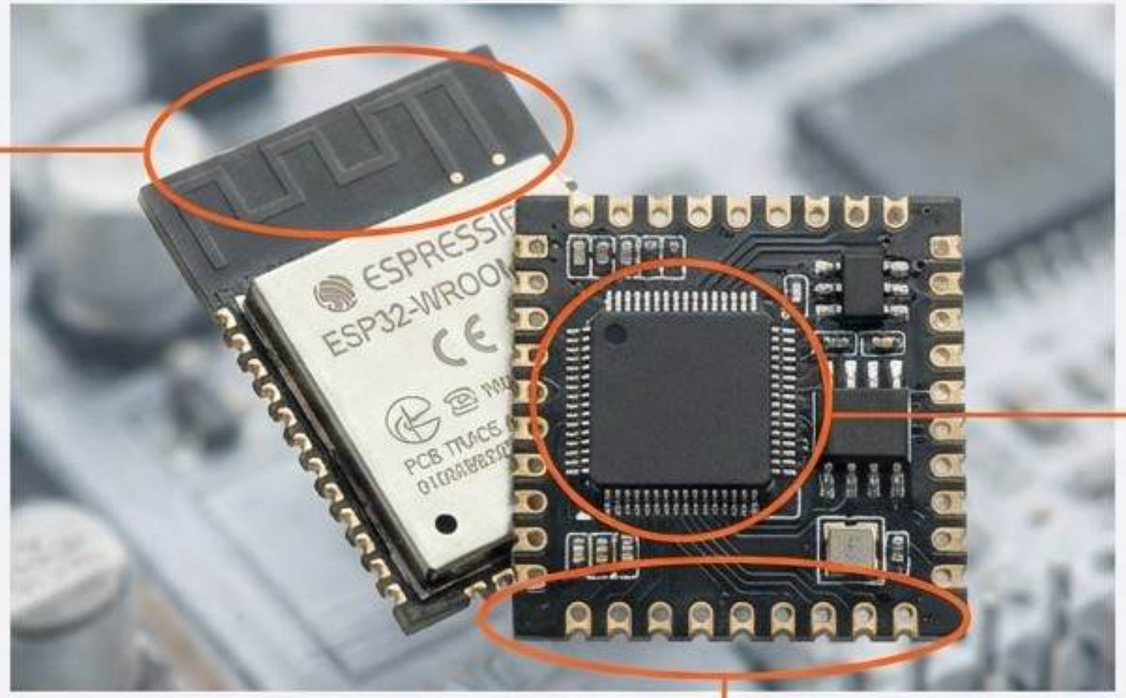

Integrated Connectivity
Native WiFi handling eliminates the need for external radio modules.

Signal Management
Simultaneous handling of Digital Output (Motors) and PWM (Servo).

Logic Processing
Interprets HTTP requests and converts them to GPIO electrical signals.

Engineering Editorial

The ‘Local-Only’ Connectivity Model

Zero dependence on internet or cellular infrastructure.

Mode: SoftAP (Software Access Point)
The ESP32 creates its own SSID: “Seed Sowing Robot”.

Independence
Operates in remote fields with zero 4G/5G signal.

Range
Superior to Bluetooth, covering standard visual-line-of-sight distances.

Engineering Editorial

The Command Center

Browser-based interface for real-time telemetry.

No App Install
Runs in Chrome/Safari.

Navigation
HTTP requests trigger L298N motor states.

Action
Toggles Servo PWM cycle.

Engineering Editorial

Locomotion Logic: The L298N Driver

Translating logic signals into physical torque.

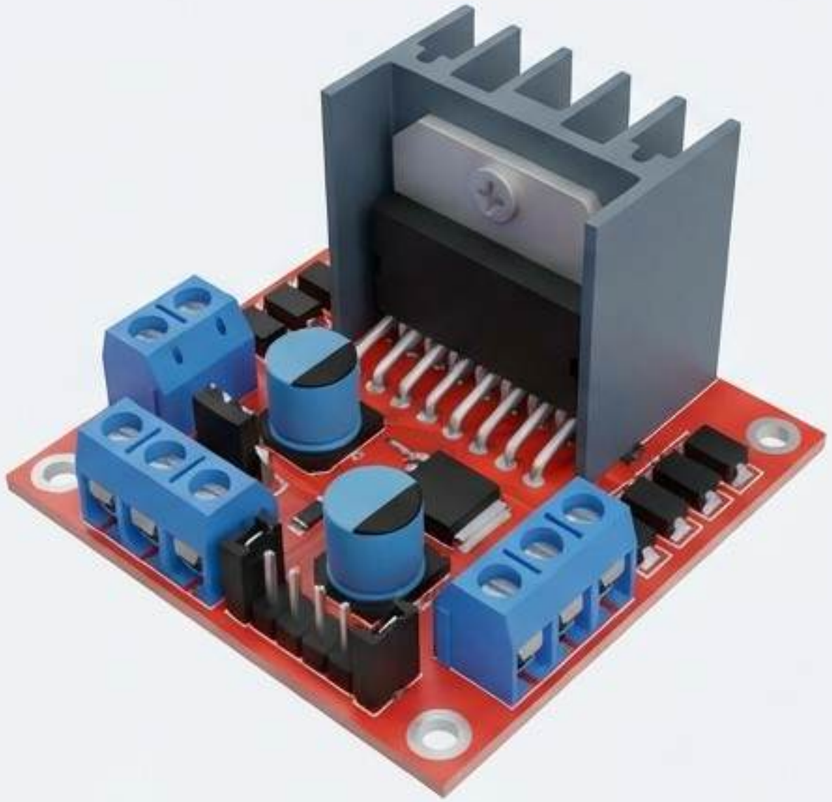

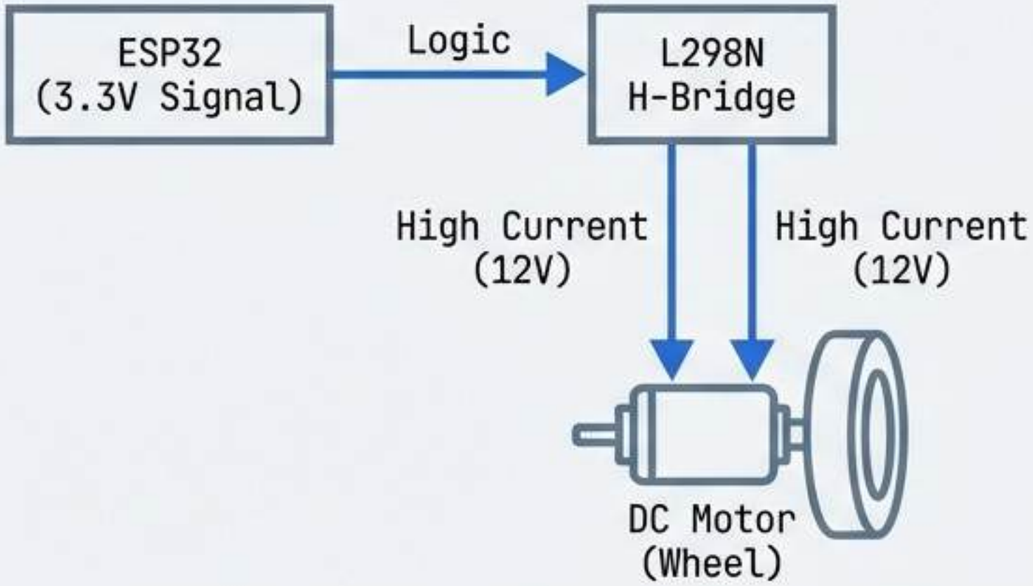

The Bridge: Microcontrollers cannot power motors directly. The L298N acts as the high-current intermediary.;
Bi-Directional: By reversing current polarity through the H-Bridge, the chassis can spin on its axis (Zero-turn radius).

The Sowing Mechanism: Servo Dynamics

Precision-controlled seed dispersal.

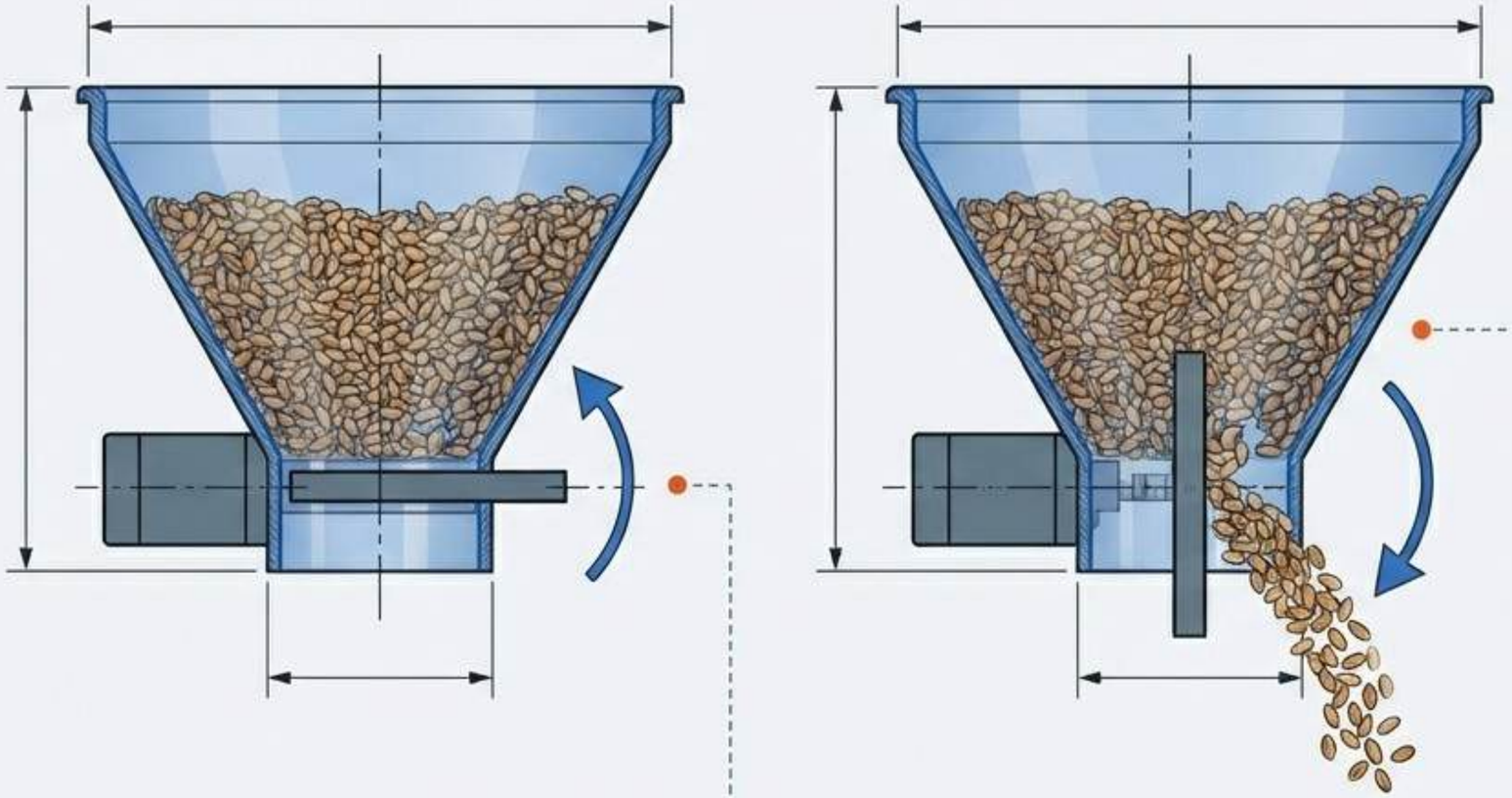

State: 0° (Closed)

State: 90° (Open)

- **Pulse Width Modulation (PWM)**
  The ESP32 sends a precise frequency signal to the servo.
- **Flow Control**
  Unlike a simple DC motor that spins continuously, the servo moves to exact angles to prevent dumping the entire payload at once.
- **Versatility**
  Compatible with wheat, mustard, and millet.

Operational Data Flow

From digital intent to physical agriculture in <200ms.

Engineering Editorial

Advantages Over Tradition

A direct comparison of manual vs. automated methods.

	MANUAL LABOR	AUTONOMOUS SOWING
Spacing:	Irregular & Clumped	Uniform & Controlled
Physical Toll:	High Fatigue / Injury Risk	Zero Physical Effort
Infrastructure:	None	Self-Hosted Network (No Internet Needed)
Economics:	Recurring Labor Costs	One-time Prototype Cost

The Roadmap to Full Autonomy

Moving from remote control to true intelligence.

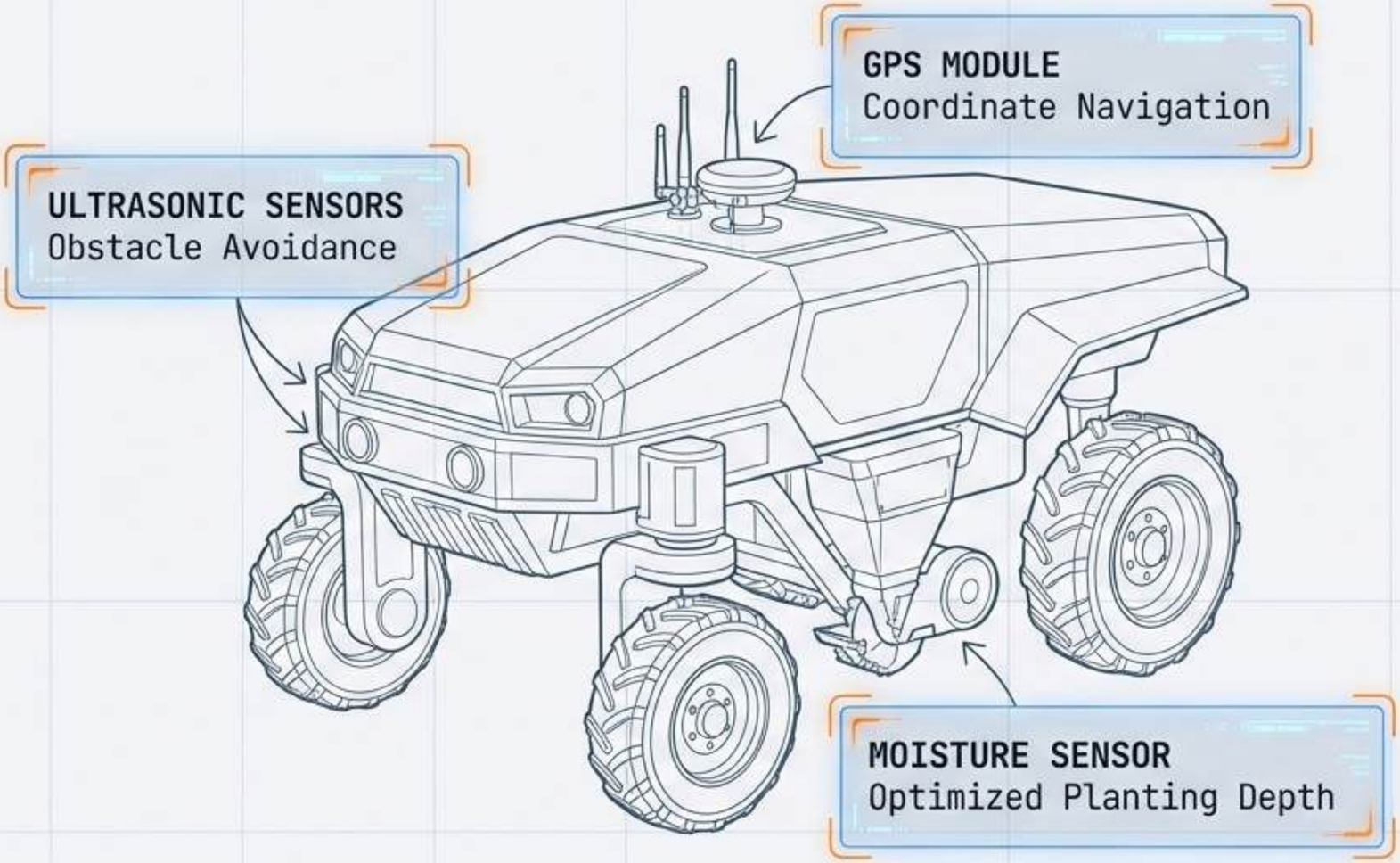

- **Current State:**
  → Human-in-the-loop (Remote Control)
- **Future State:**
  → **Fully Autonomous** (Set & Forget)

Conclusion: A Foundation for Smart Farming

- **Success**: Demonstrated viable wireless control of complex mechanical tasks using low-cost ESP32 architecture.
- **Impact**: Reduces labor, eliminates waste, and increases yield potential.
- **Scalability**: The 'No-Internet' SoftAP model proves that high-tech IoT solutions can be deployed in low-infrastructure rural environments.

AGRICULTURE 2.0

Thank
You