Precision Agriculture

The ESP32 Autonomous Interface

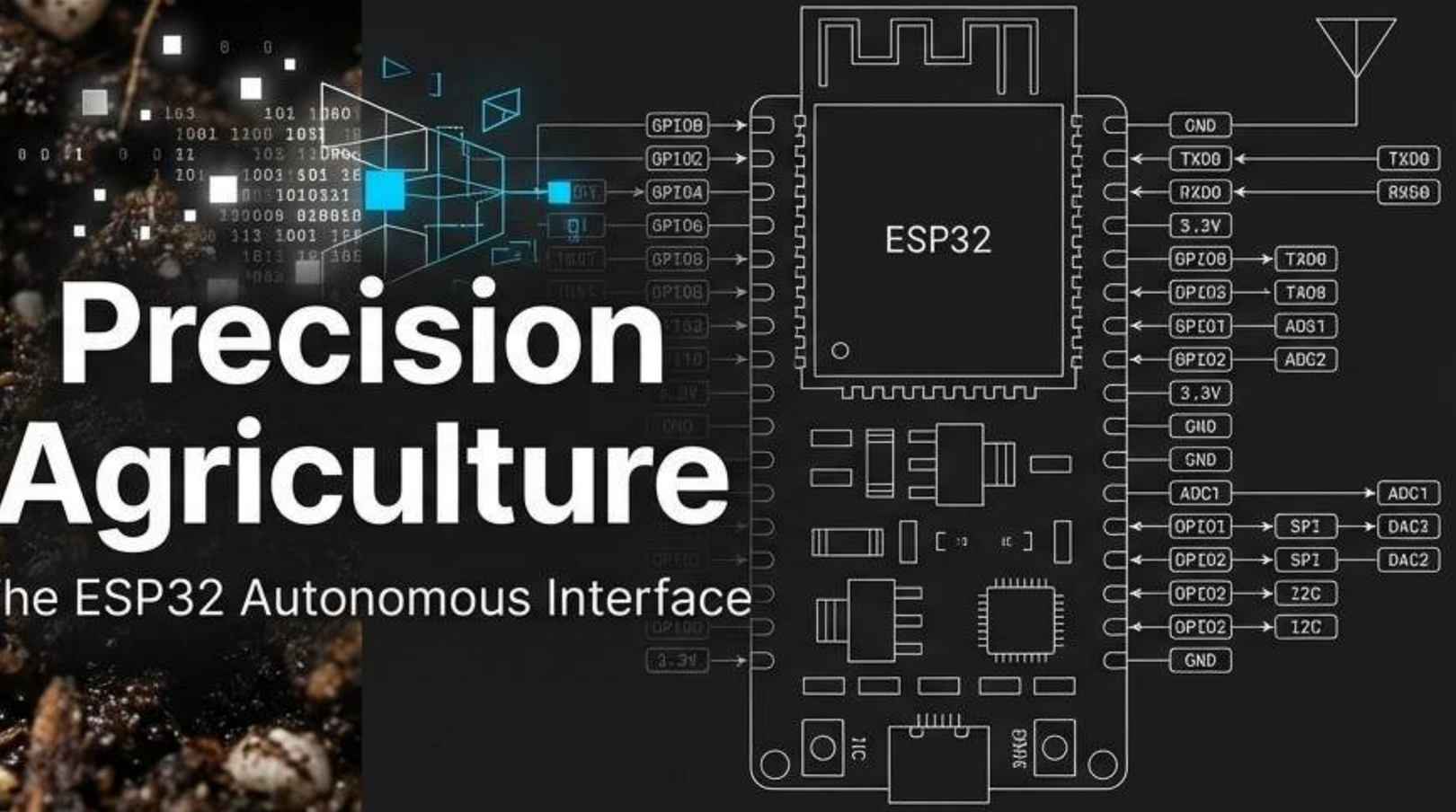

Bridging the gap between manual labor and embedded automation.

The High Cost of Manual Sowing

JetBrains Mono

```
// INEFFICIENCY: High labor & time cost
// INCONSISTENCY: Uneven placement = Wastage
// PHYSICAL TOLL: Human fatigue reduces yield
```

The Compact Architecture

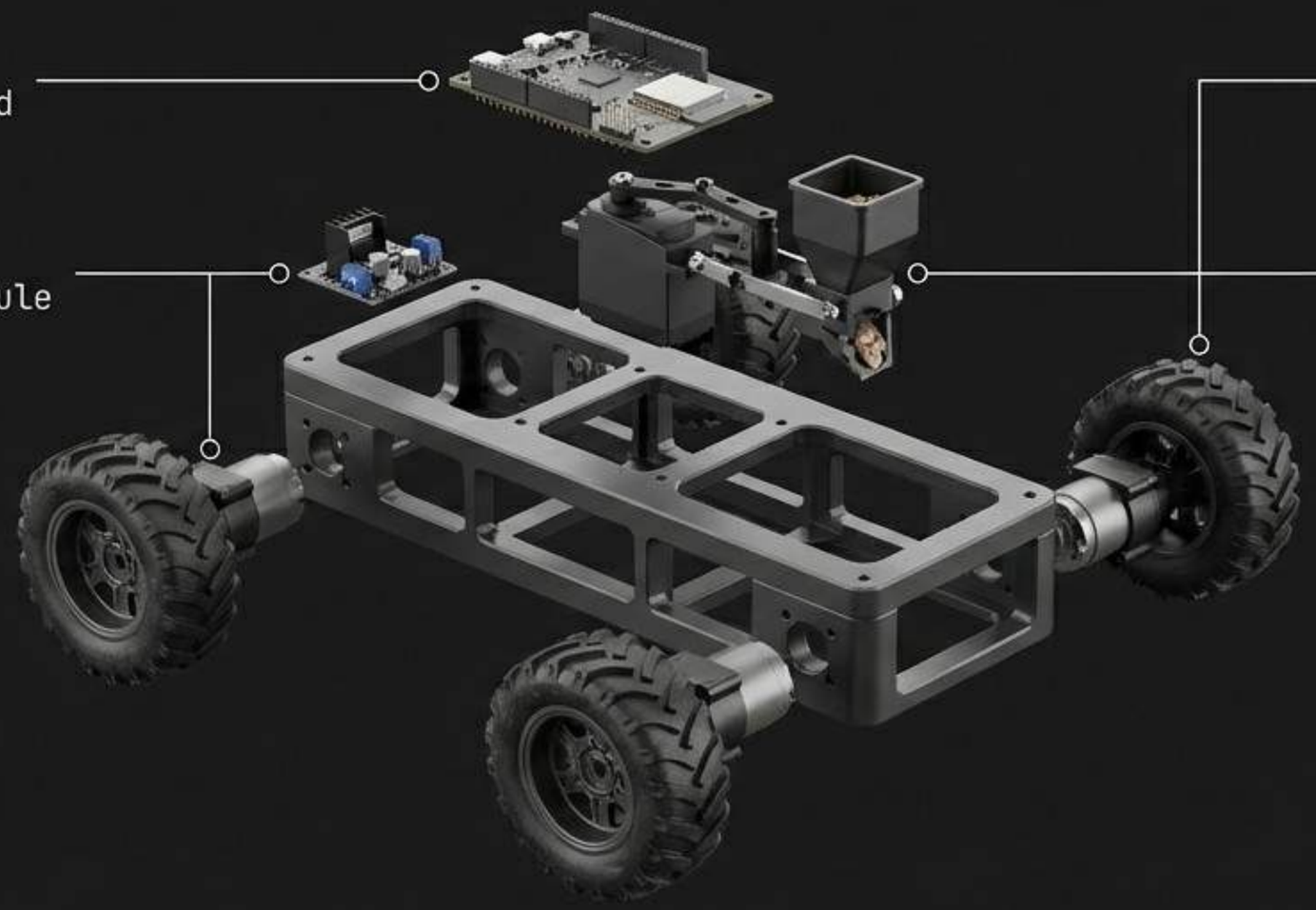

The ESP32 Control Hub

- **Central Controller:** Signals & Logic
- **Network Generator:** Standalone Hotspot
- **Identity:** Direct Device Connection

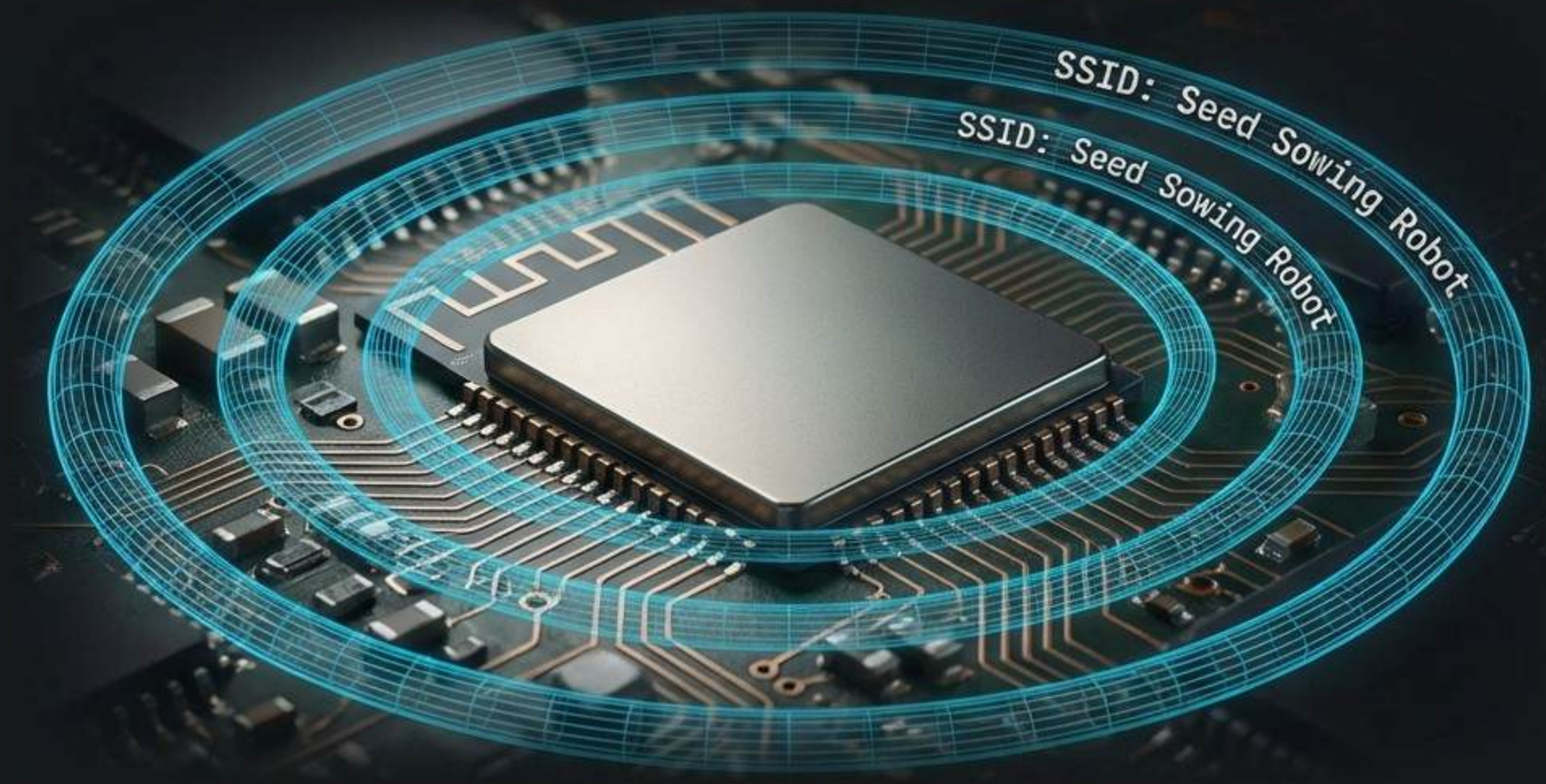

Locomotion & Power

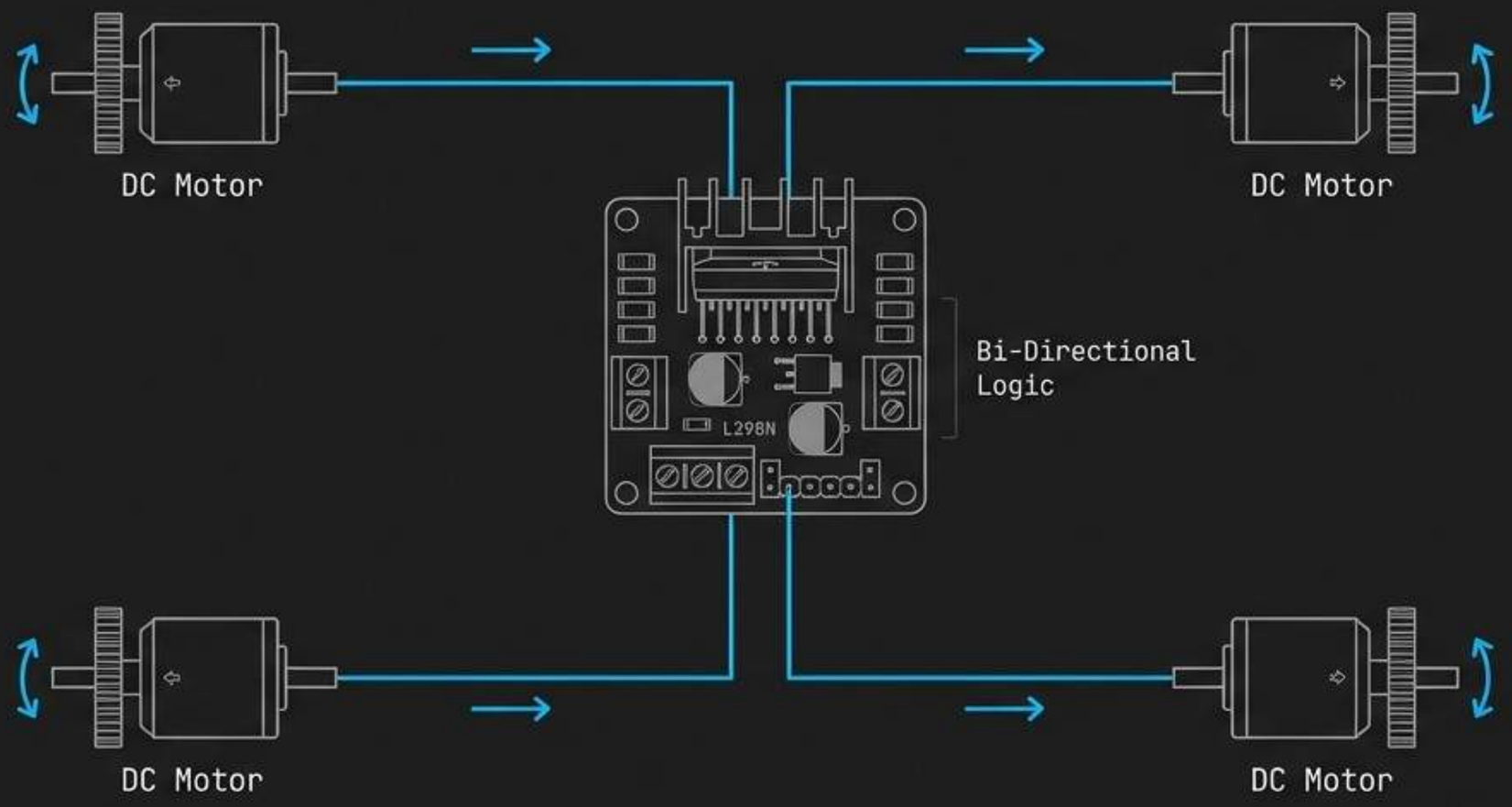

DRIVER:
L298N Dual H-Bridge

FUNCTION:
High Current Delivery

CONTROL:
Differential Steering
(Left/Right)

The PWM Actuation System

MECHANISM: Servo-operated flap **SIGNAL:** Pulse Width Modulation **ACTION:** Precision release

Autonomy from the Grid

LOCAL NETWORK:
Self-generated WiFi Hotspot

RANGE INDEPENDENCE:
No 4G/5G required

ENVIRONMENT:
Optimized for remote fields

The Web-Based Command Center

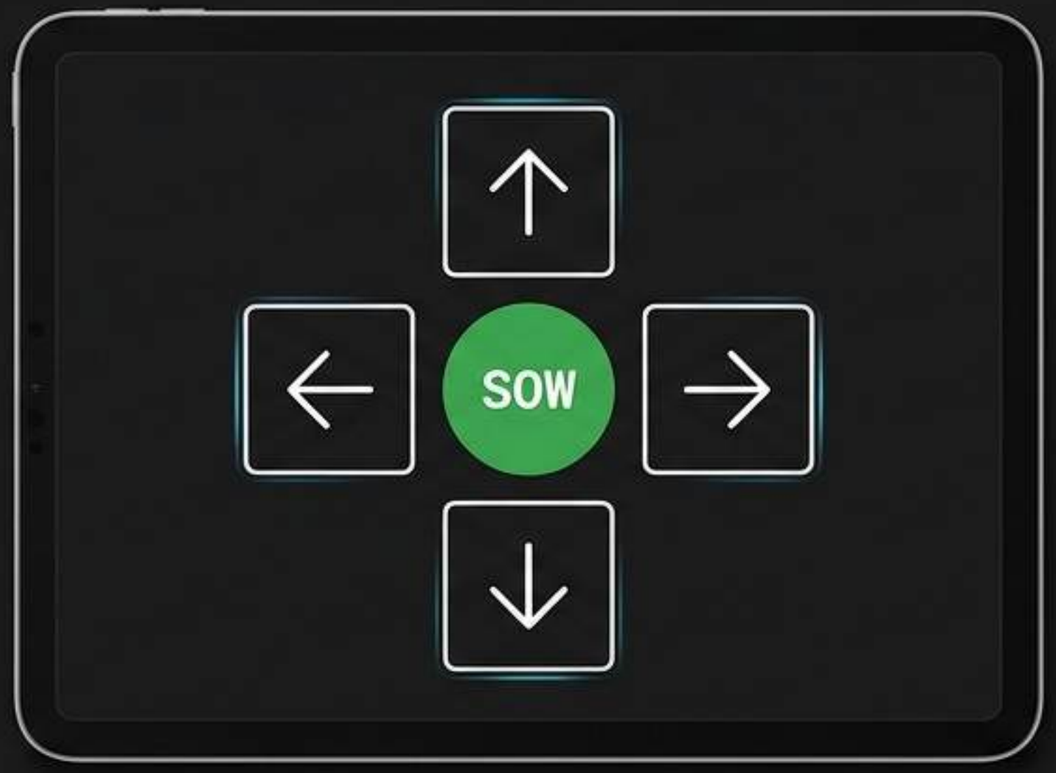

BROWSER BASED

LATENCY FREE

UNIVERSAL ACCESS

Multi-Crop Versatility

Adaptable outlet sizing for Wheat, Mustard, Millet, and Vegetables.

✅ **Uniform Growth & Higher Yield**

Roadmap to Smart Farming

From remote control to full autonomy.

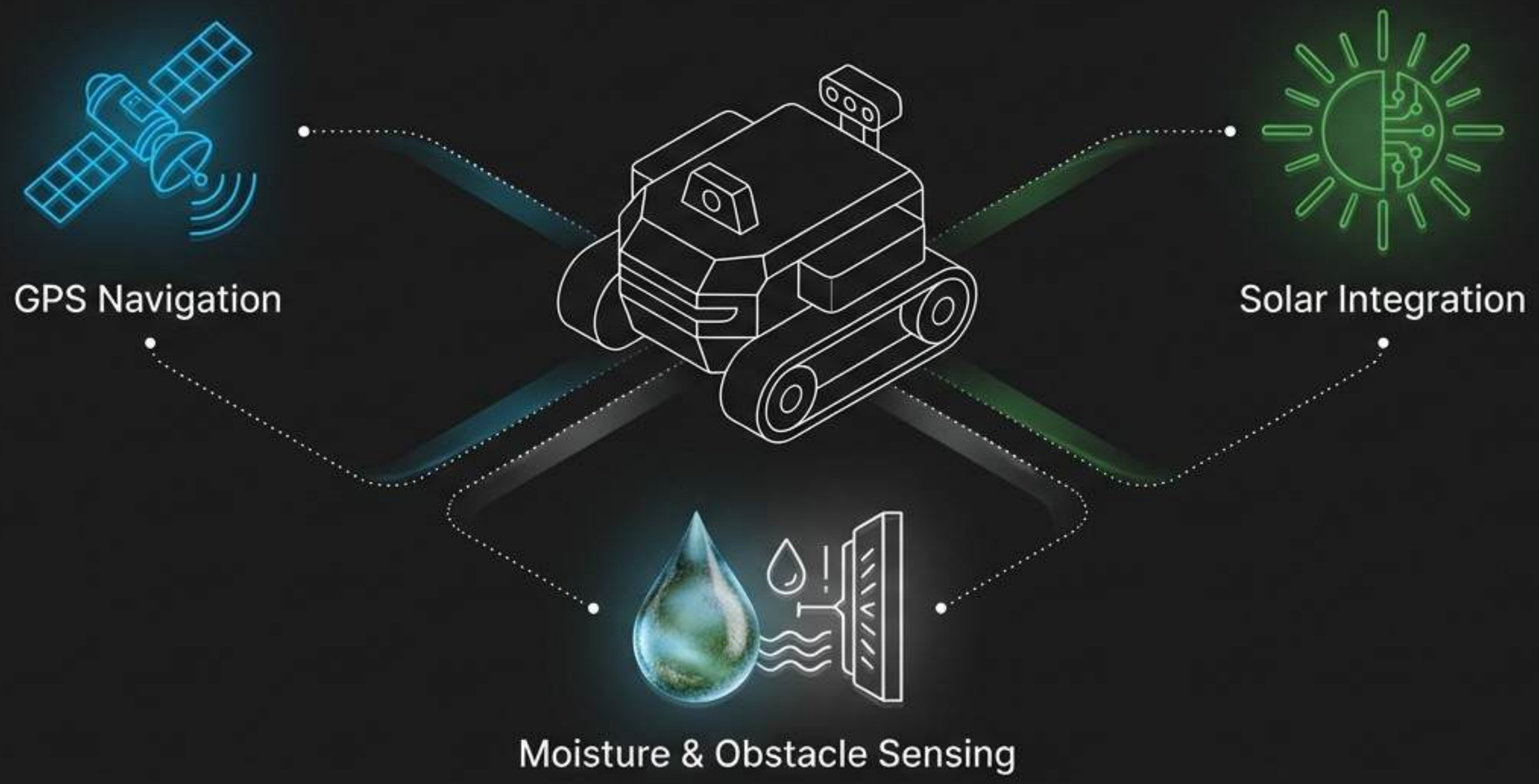

The Value Proposition

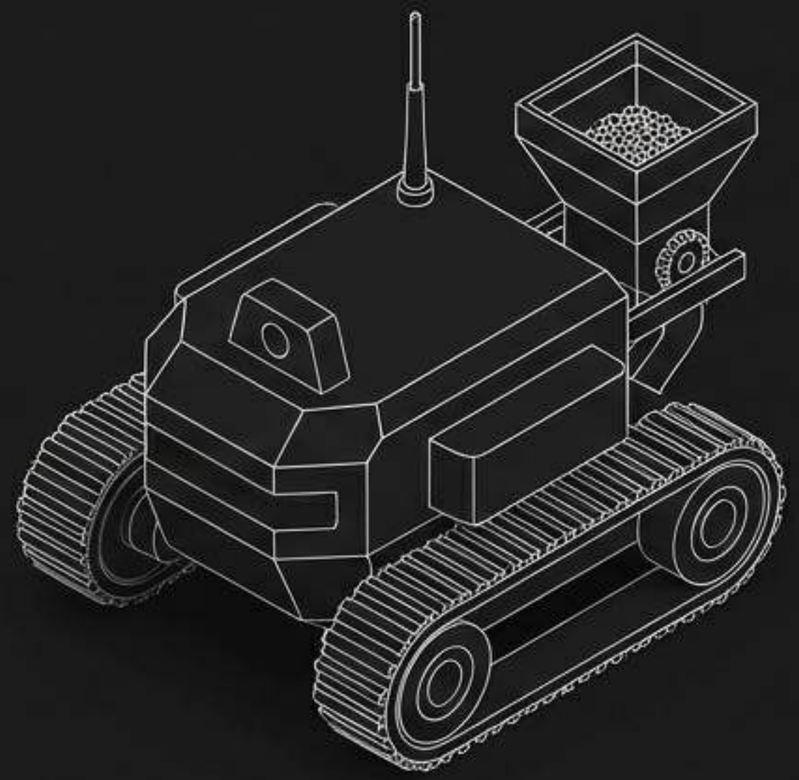

EFFICIENCY:
Reduces time & labor

PRECISION:
Zero wastage

ACCESSIBILITY:
Wireless & Cost-effective

A Foundation for Future Automation

"Modernizing agriculture through accessible, wireless robotics to increase productivity and reduce labor."

THE FUTURE IS AUTONOMOUS

Thank You

"Modernizing agriculture through accessible, wireless robotics to increase productivity and reduce labor."

Hetank ~ Jash ~ Vishva ~ Rudra