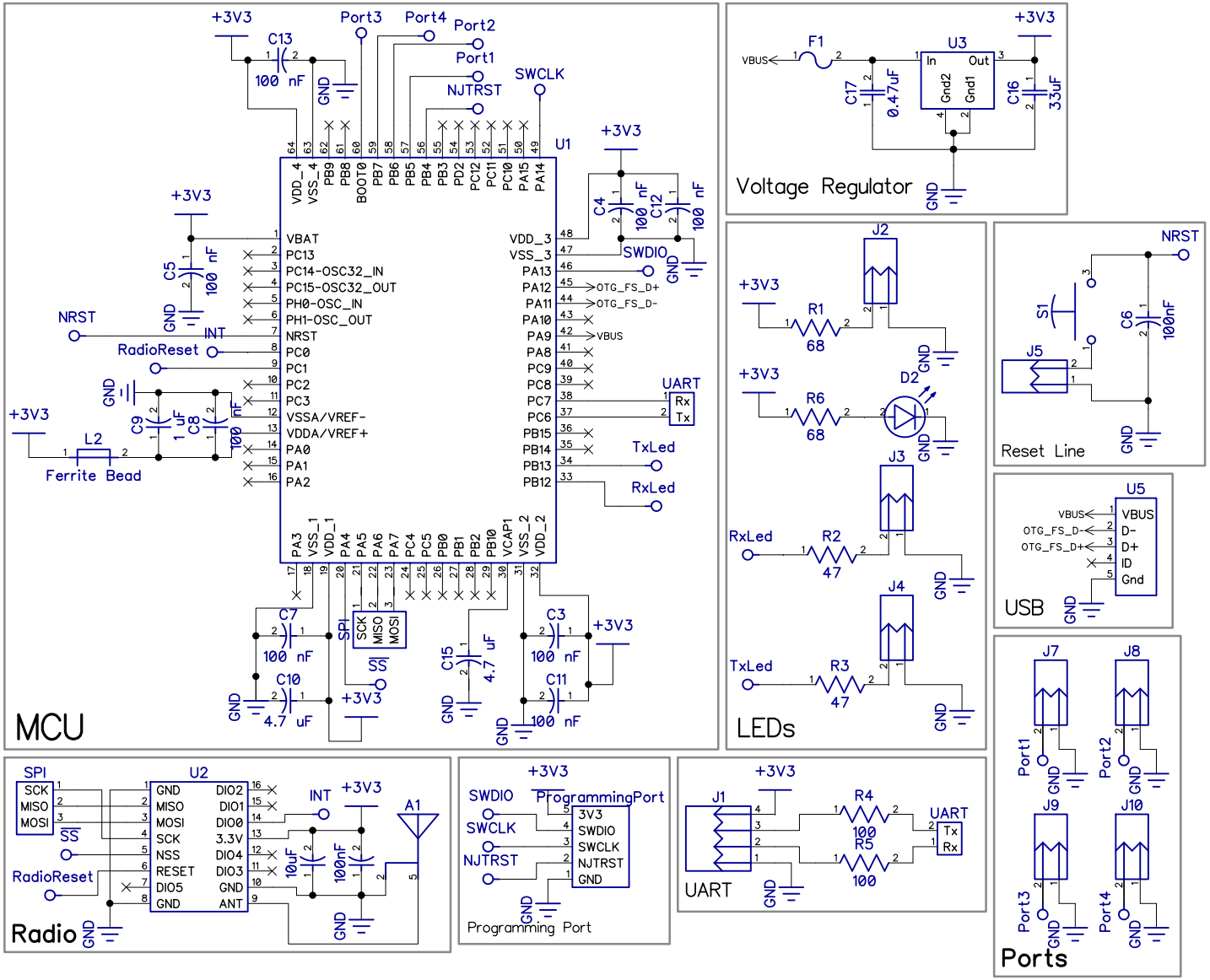
MCU
U1
VBAT
PC13
PC14-OSC32_IN
PC15-OSC32_OUT
PH0-OSC_IN
PH1-OSC_OUT
NRST
PC0
PC1
PC2
PC3
VSSA/VREF-
VDDA/VREF+
PA0
PA1
PA2
VDD_3
VSS_3
PA13
PA12
PA11
PA10
PA9
PA8
PC9
PC8
PC7
PC6
PB15
PB14
PB13
PB12
OTG_FS_D+
OTG_FS_D-
VBUS
SWDIO
UART
Rx
Tx
TxLed
RxLed
Port3
Port4
Port2
Port1
SWCLK
NJTRST
+3V3
C13
100 nF
GND
C5
100 nF
NRST
INT
RadioReset
C9
1 uF
C8
100 nF
L2
Ferrite Bead
C4
100 nF
C12
100 nF
C7
100 nF
C10
4.7 uF
SPI
SCK
MISO
MOSI
SS
C15
4.7 uF
C3
100 nF
C11
100 nF
Voltage Regulator
F1
VBUS
U3
In
Out
Gnd2
Gnd1
C17
0.47uF
C16
33uF
LEDs
J2
R1
68
D2
R6
68
J3
RxLed
R2
47
J4
TxLed
R3
47
Reset Line
S1
J5
C6
100nF
USB
U5
VBUS
D-
D+
ID
Gnd
Ports
J7
J8
J9
J10
Port1
Port2
Port3
Port4
Radio
U2
GND
MISO
MOSI
SCK
NSS
RESET
DIO5
GND
DIO2
DIO1
DIO0
3.3V
DIO4
DIO3
GND
ANT
10uF
100nF
A1
Programming Port
ProgrammingPort
3V3
SWDIO
SWCLK
NJTRST
GND
UART
J1
R4
100
R5
100