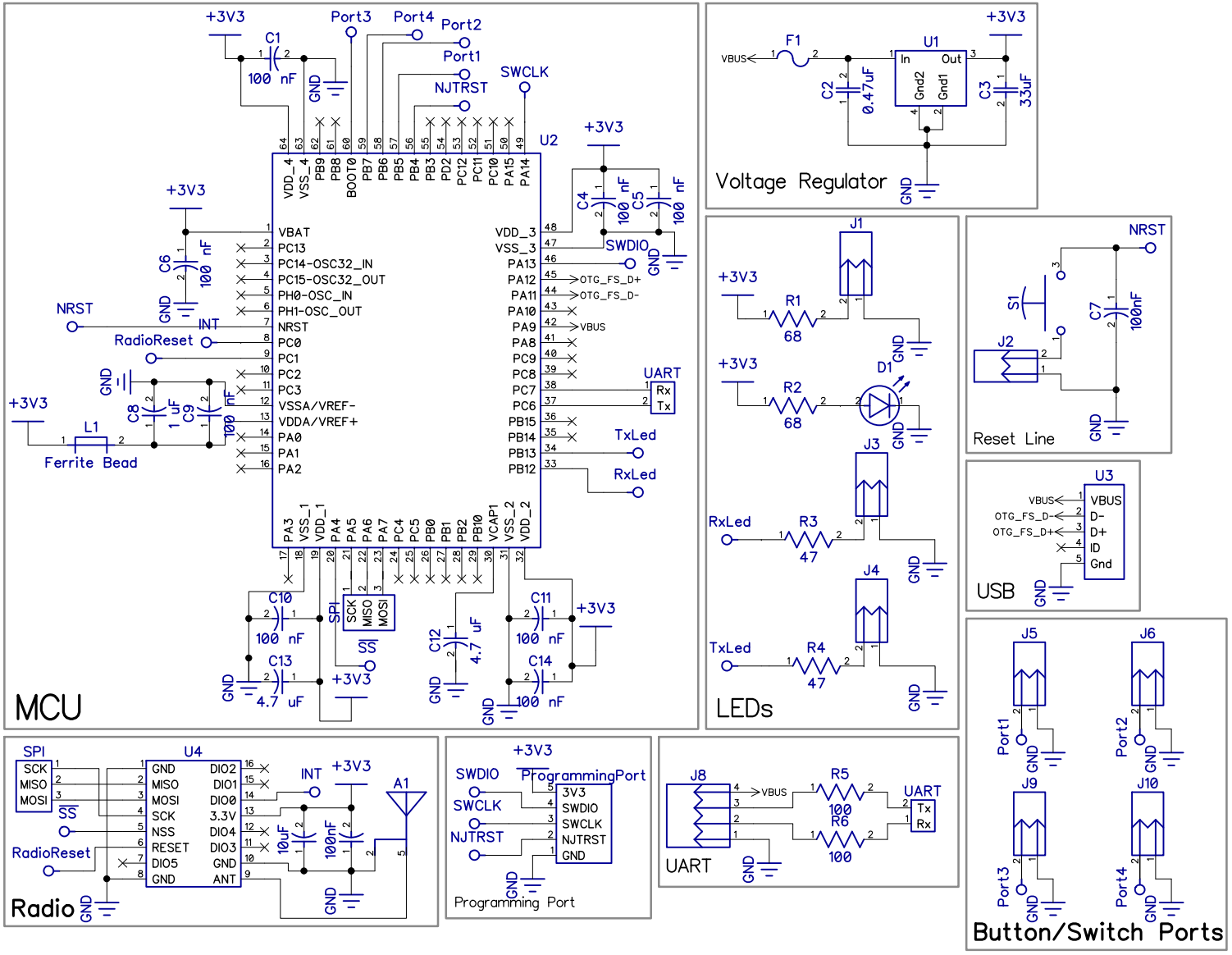
MCU
U2
+3V3
C1
100 nF
GND
Port3
Port4
Port2
Port1
NJTRST
SWCLK
VDD_4
VSS_4
PB9
PB8
BOOT0
PB7
PB6
PB5
PB4
PB3
PD2
PC12
PC11
PC10
PA15
PA14
VBAT
PC13
PC14-OSC32_IN
PC15-OSC32_OUT
PH0-OSC_IN
PH1-OSC_OUT
NRST
PC0
PC1
PC2
PC3
VSSA/VREF-
VDDA/VREF+
PA0
PA1
PA2
VDD_3
VSS_3
PA13
PA12
PA11
PA10
PA9
PA8
PC9
PC8
PC7
PC6
PB15
PB14
PB13
PB12
OTG_FS_D+
OTG_FS_D-
VBUS
C4
100 nF
C5
100 nF
SWDIO
C6
100 nF
INT
RadioReset
UART
Rx
Tx
C8
1 uF
C9
100 nF
L1
Ferrite Bead
TxLed
RxLed
PA3
VSS_1
VDD_1
PA4
PA5
PA6
PA7
PC4
PC5
PB0
PB1
PB2
PB10
VCAP1
VSS_2
VDD_2
SPI
SCK
MISO
MOSI
SS
C10
100 nF
C13
4.7 uF
C12
4.7 uF
C11
100 nF
C14
100 nF
Voltage Regulator
F1
U1
In
Out
Gnd2
Gnd1
C2
0.47uF
C3
33uF
LEDs
J1
R1
68
D1
R2
68
J3
R3
47
J4
R4
47
Reset Line
NRST
S1
J2
C7
100nF
USB
U3
VBUS
D-
D+
ID
Gnd
Button/Switch Ports
J5
J6
J9
J10
Port1
Port2
Port3
Port4
Radio
U4
GND
MISO
MOSI
SCK
NSS
RESET
DIO5
DIO2
DIO1
DIO0
3.3V
DIO4
DIO3
ANT
10uF
100nF
A1
Programming Port
ProgrammingPort
3V3
SWDIO
SWCLK
NJTRST
UART
J8
R5
100
R6
100