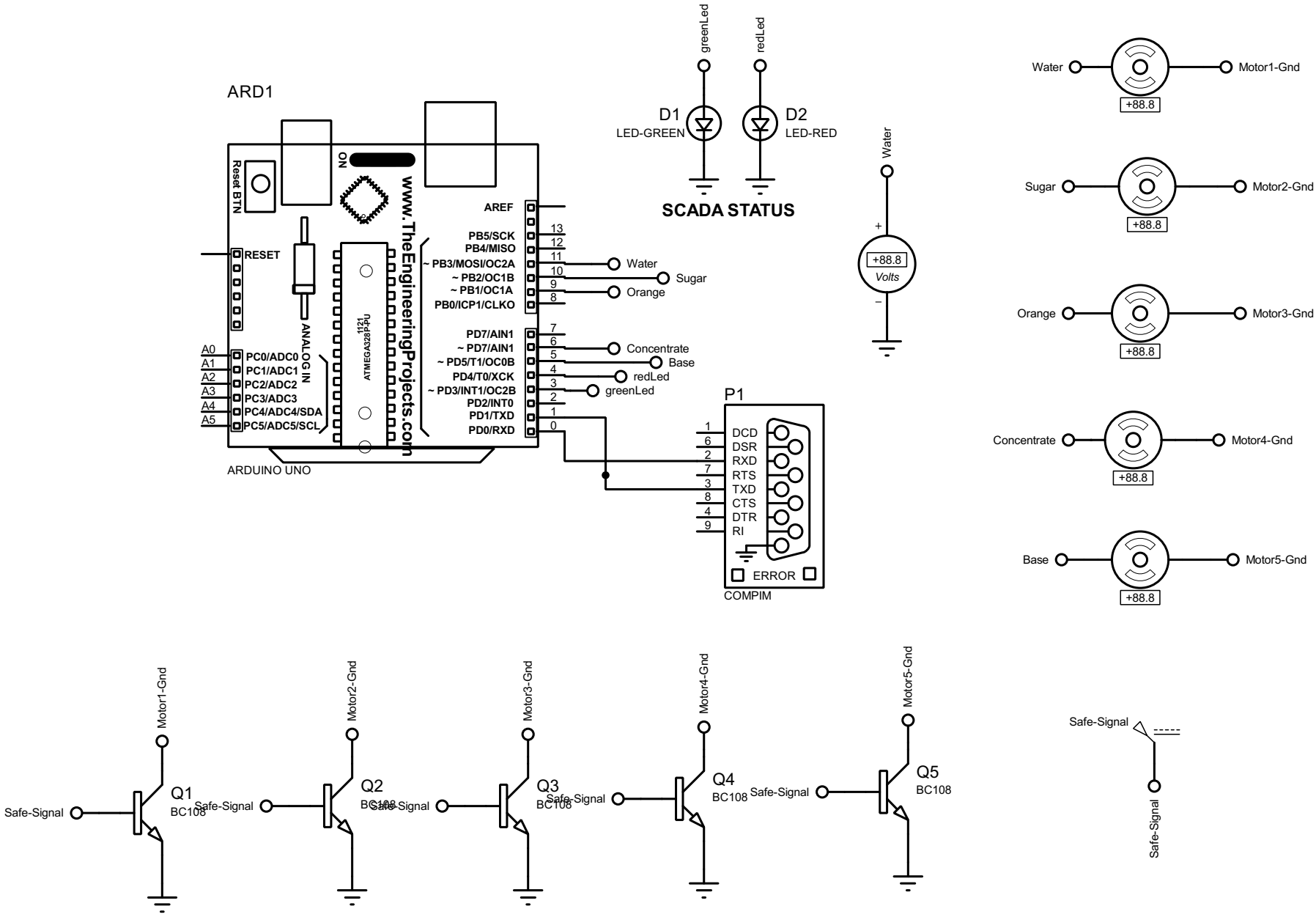
ARD1
Reset BTN
ON
www.TheEngineeringProjects.com
RESET
ANALOG IN
ATMEGA328P-PU
1121
A0
A1
A2
A3
A4
A5
PC0/ADC0
PC1/ADC1
PC2/ADC2
PC3/ADC3
PC4/ADC4/SDA
PC5/ADC5/SCL
AREF
PB5/SCK
PB4/MISO
~ PB3/MOSI/OC2A
~ PB2/OC1B
~ PB1/OC1A
PB0/ICP1/CLKO
PD7/AIN1
~ PD7/AIN1
~ PD5/T1/OC0B
PD4/T0/XCK
~ PD3/INT1/OC2B
PD2/INT0
PD1/TXD
PD0/RXD
Water
Sugar
Orange
Concentrate
Base
redLed
greenLed
ARDUINO UNO
greenLed
redLed
D1
LED-GREEN
D2
LED-RED
SCADA STATUS
Water
+88.8
Volts
P1
DCD
DSR
RXD
RTS
TXD
CTS
DTR
RI
ERROR
COMPIM
Water
Motor1-Gnd
Sugar
Motor2-Gnd
Orange
Motor3-Gnd
Concentrate
Motor4-Gnd
Base
Motor5-Gnd
Motor1-Gnd
Motor2-Gnd
Motor3-Gnd
Motor4-Gnd
Motor5-Gnd
Safe-Signal
Q1
BC108
Q2
BC108
Q3
BC108
Q4
BC108
Q5
BC108