System and Devices (SYS 3)

Tutorial Lecture 2 : Pipeline Hazards

Dr Pengcheng Liu

True/False

Which of the following statements is/are TRUE?

1. RAW data hazard could be reduced by operand forwarding.
2. A normal in-order 5 stage MIPS pipeline can achieve an IPC larger than 1.
3. For a MIPS instruction STR R2, 16(R3), some contents stored in its ID/EX pipeline register will bypass the EX unit directly to EX/MEM pipeline register.
4. A normal 5 stage in order RISC pipeline without operand forwarding can have RAW and WAR hazards.

(A) 1 only (B) 1 and 3 only (C) 2 and 4 only (D) 3 and 4 only

Operand Forwarding to Avoid Data Hazard

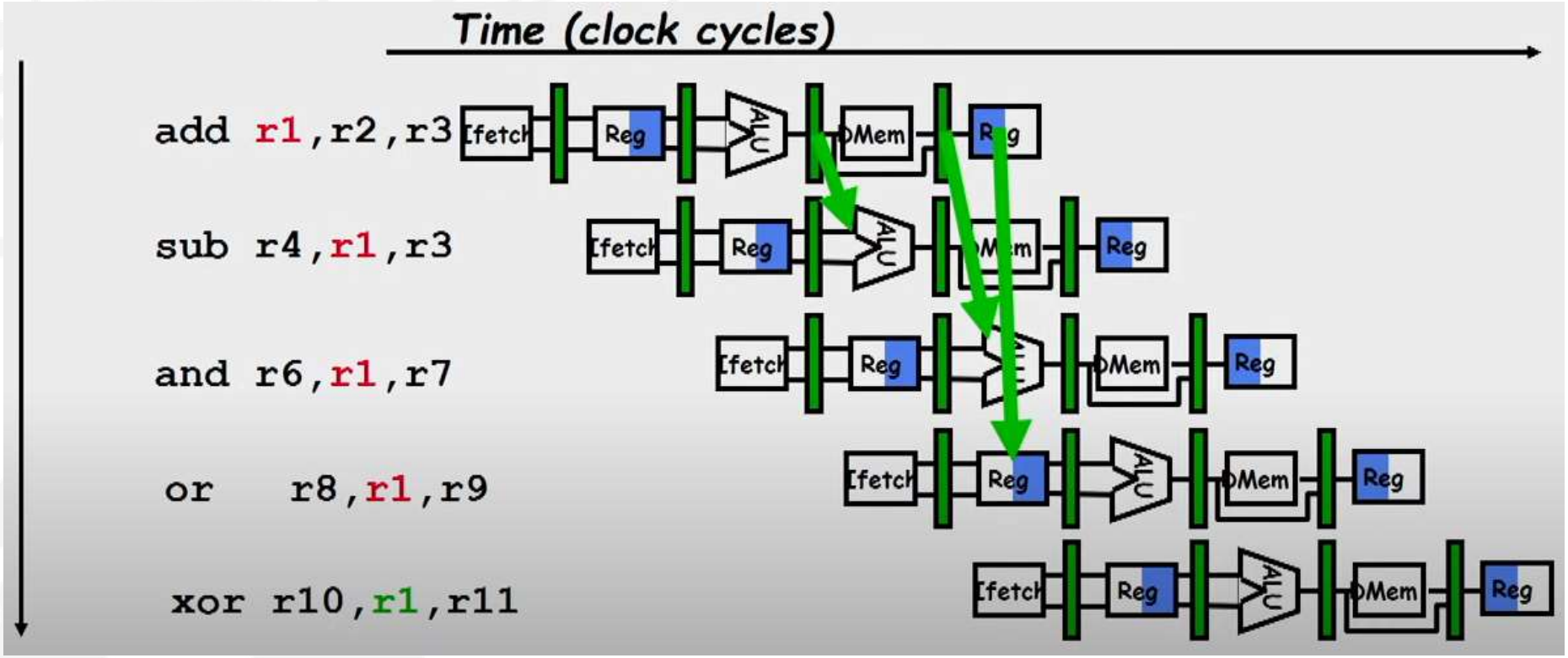

True/False

Which of the following statements is/are TRUE?

1. RAW data hazard could be reduced by operand forwarding. ✓
2. A normal in-order 5 stage MIPS pipeline can achieve an IPC larger than 1.
3. For a MIPS instruction STR R2, 16(R3), some contents stored in its ID/EX pipeline register will bypass the EX unit directly to EX/MEM pipeline register.
4. A normal 5 stage in order RISC pipeline without operand forwarding can have RAW and WAR hazards.

(A) 1 only (B) 1 and 3 only (C) 2 and 4 only (D) 3 and 4 only

Visualizing Pipelining

	Clock number								
Instruction number	**1**	**2**	**3**	**4**	**5**	**6**	**7**	**8**	**9**
Instruction *i*	IF	ID	EX	MEM	WB				
Instruction *i* + 1		IF	ID	EX	MEM	WB			
Instruction *i* + 2			IF	ID	EX	MEM	WB		
Instruction *i* + 3				IF	ID	EX	MEM	WB	
Instruction *i* + 4					IF	ID	EX	MEM	WB

True/False

Which of the following statements is/are TRUE?

1. RAW data hazard could be reduced by operand forwarding. ✓
2. A normal in-order 5 stage MIPS pipeline can achieve an IPC larger than 1. ✗
3. For a MIPS instruction STR R2, 16(R3), some contents stored in its ID/EX pipeline register will bypass the EX unit directly to EX/MEM pipeline register.
4. A normal 5 stage in order RISC pipeline without operand forwarding can have RAW and WAR hazards.

(A) 1 only (B) 1 and 3 only (C) 2 and 4 only (D) 3 and 4 only

Pipelined RISC Data Path

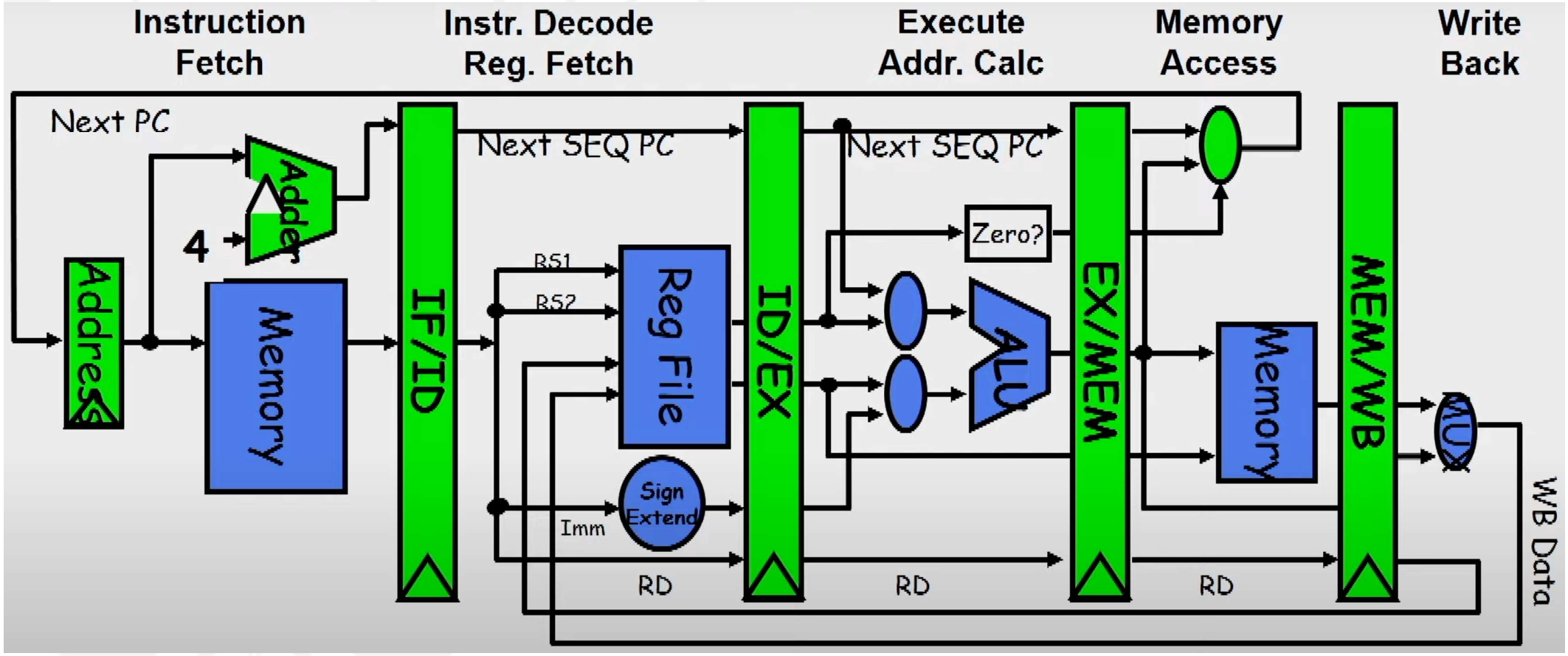

STR R2, 16(R3)

True/False

Which of the following statements is/are TRUE?

1. RAW data hazard could be reduced by operand forwarding. ✓
2. A normal in-order 5 stage MIPS pipeline can achieve an IPC larger than 1. ✗
3. For a MIPS instruction STR R2, 16(R3), some contents stored in its ID/EX pipeline register will bypass the EX unit directly to EX/MEM pipeline register. ✓
4. A normal 5 stage in order RISC pipeline without operand forwarding can have RAW and WAR hazards.

(A) 1 only (B) 1 and 3 only (C) 2 and 4 only (D) 3 and 4 only

Visualizing Pipelining

	Clock number								
Instruction number	**1**	**2**	**3**	**4**	**5**	**6**	**7**	**8**	**9**
Instruction *i*	IF	ID	EX	MEM	WB				
Instruction *i* + 1		IF	ID	EX	MEM	WB			
Instruction *i* + 2			IF	ID	EX	MEM	WB		
Instruction *i* + 3				IF	ID	EX	MEM	WB	
Instruction *i* + 4					IF	ID	EX	MEM	WB

add r1, r2, r3
sub r4, r1, r3
and r6, r1, r7

add r1, r2, r3
sub r3, r1, r4
and r4, r1, r7

True/False

Which of the following statements is/are TRUE?

1. RAW data hazard could be reduced by operand forwarding. ✓
2. A normal in-order 5 stage MIPS pipeline can achieve an IPC larger than 1. ✗
3. For a MIPS instruction STR R2, 16(R3), some contents stored in its ID/EX pipeline register will bypass the EX unit directly to EX/MEM pipeline register. ✓
4. A normal 5 stage in order RISC pipeline without operand forwarding can have RAW and WAR hazards. ✗

(A) 1 only **(B) 1 and 3 only** (C) 2 and 4 only (D) 3 and 4 only

Pipeline Hazards

Given a non-pipelined architecture running at 1.5 GHz, that takes 5 cycles to finish an instruction. You want to make it pipelined with 5 stages. Due to hardware overhead the pipelined design will operate only at 1 GHz. 5% of memory instructions cause a stall of 50 cycles, 30% of branch instruction cause a stall of 2 cycles and load-ALU combinations cause a stall of 1 cycle. Assume that in a given program, there exist 20% of branch instructions and 30% of memory instructions. 10% of instructions are load-ALU combinations. What is the speedup of pipelined design over the non-pipelined design?

Pipeline Hazards

1.5 GHz → 0.67 ns : 1 GHz → 1 ns

(a) CPI_up = 5

ExT up = CPI × CCT = 5 × 0.66ns = 3.33 ns/instruction

(b) Effective CPIp = Base CPI + stall CPI

{**stalls** = Memory stalls + Branch stalls + Load-ALU stalls} = 1 + (0.3 × 0.05 × 50) + (0.2 × 0.3 × 2) + (0.1 × 1)

= 1 + 0.75 + 0.12 + 0.1 = 1.97

Ex_p = CPI × CCT = 1.97 × 1 ns = 1.97 ns/instruction

Speedup = Ex_up / Ex_p = 3.33/1.97 = 1.69

Pipeline Hazards

A program has 2000 instructions in the sequence L.D, ADD.D, L.D, ADD.D, ……L.D, ADD.D. The ADD.D instruction depends on the L.D instruction right before it. The L.D instruction depends on the ADD.D instruction right before it. If the program is executed on the 5-stage pipeline, what would be the actual CPI with and without operand forwarding technique?

Pipeline Hazards

Without operand forwarding

ID of nth instruction can be only after WB of (n-1)th instruction.

3 stalls in each instruction.

	1	2	3	4	5	6	7	8	9	10	11	12	13	14
L.D	IF	ID	EX	ME	WB									
ADD		IF	*	*	*	ID	EX	ME	WB					
L.D						IF	*	*	*	ID	EX	ME	WB	
ADD										IF	*	*	*	ID

Instructions reach WB at clock cycles 5, 9, 13, 17, 21, 25, 29, ……

Last instruction (ADD) reaches WB in 5 + (1999×4) = 8001 cycles.

CPI = 8001/2000 = 4.0005

Pipeline Hazards

With operand forwarding

Every ADD after L.D has a stall, but L.D after ADD do not have a stall.

	1	2	3	4	5	6	7	8	9	10	11	12	13	14
L.D	IF	ID	EX	ME	WB									
ADD		IF	*	ID	EX	ME	WB							
L.D				IF	ID	EX	ME	WB						
ADD					IF	*	ID	EX	ME	WB				

Instructions reach WB at clock cycles 5, 7, 8, 10, 11, 13, 14, 16

Last instruction (ADD) reaches WB in 7 + (999×3) = 3004 cycles.

CPI = 3004/2000 = 1.502

Summary