System Block:

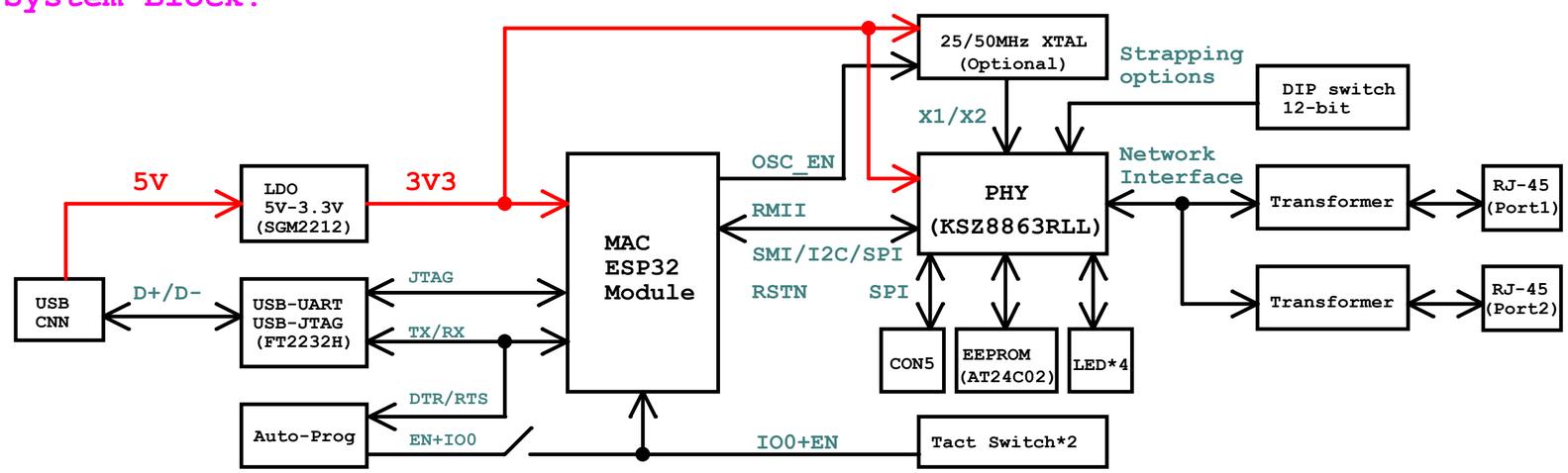

ESPRESSIF

乐鑫信息科技（上海）股份有限公司

Title	<ESP32_Ethernet_TestBoard_For_KSZ8863RLL>		
Size C	Page Name <01 : DesignBlock>	Rev V1.1	Confidential and Proprietary
Date: Tuesday, May 31, 2022		Sheet 1 of 3	

PHY

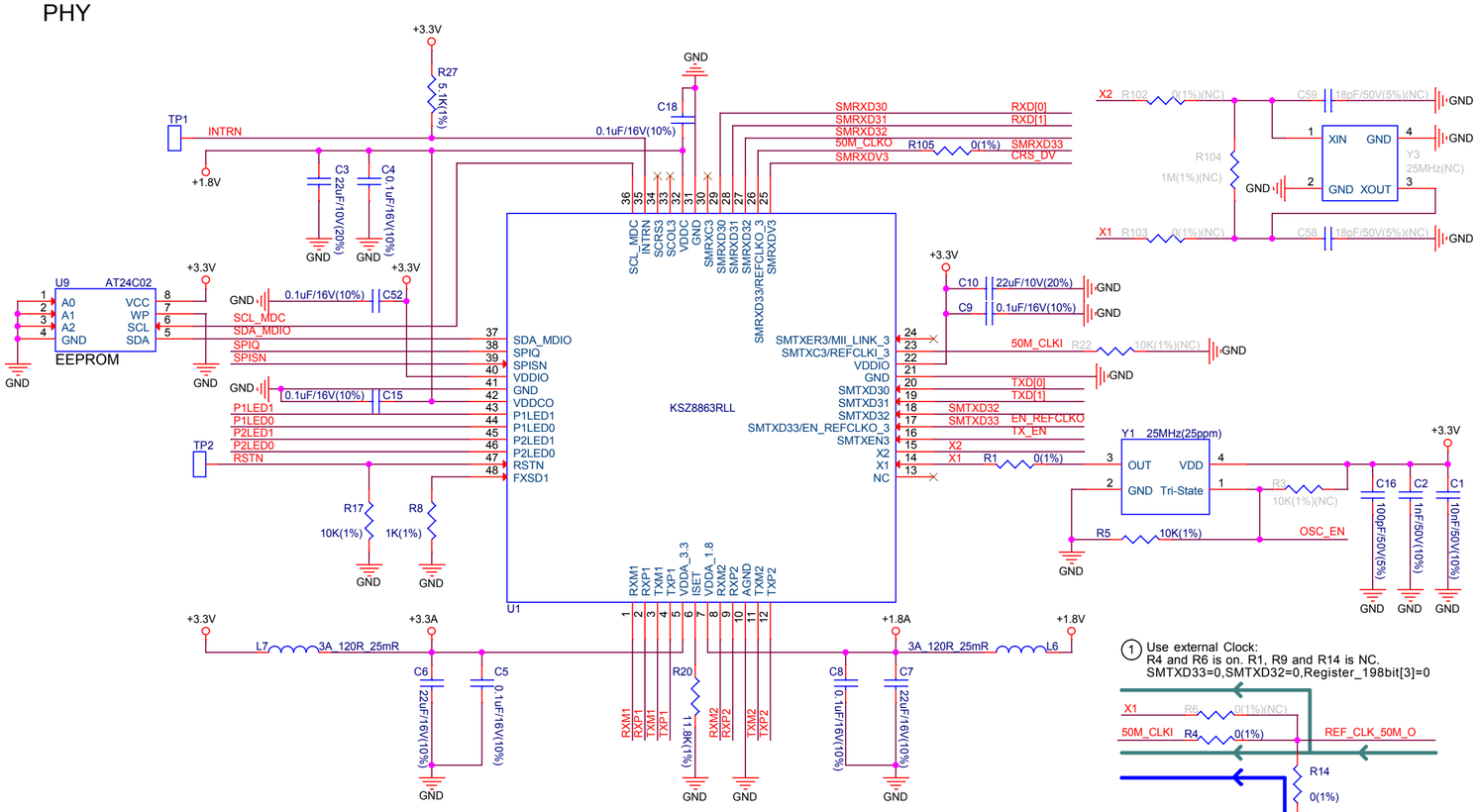

① Use external Clock:
R4 and R6 is on. R1, R9 and R14 is NC.
SMTXD33=0,SMTXD32=0,Register_198bit[3]=0

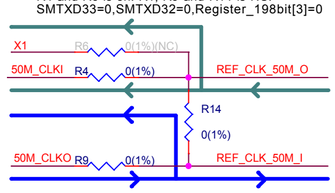

The clock should be applied to X1 pin before the reset voltage goes high.

③ Use internal Clock:
R1, R9, R14 and R4 is on. R59 is NC.
SMTXD33=1,SMTXD32=1,Register_198bit[3]=0

LED

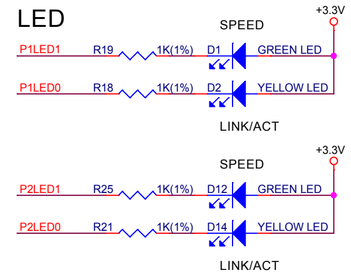

LED Pin	Pin State	Pin LED Definition	Link/Activity
PxLED0	L	ON	Link On
	Toggle	Blinking	Activity
	H	OFF	No Activity
PxLED1	H	OFF	OFF
	L	ON	Speed

SPI

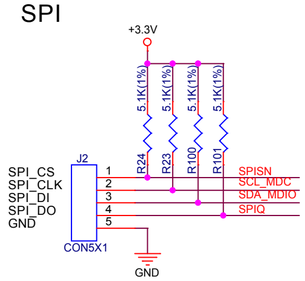

Strapping option

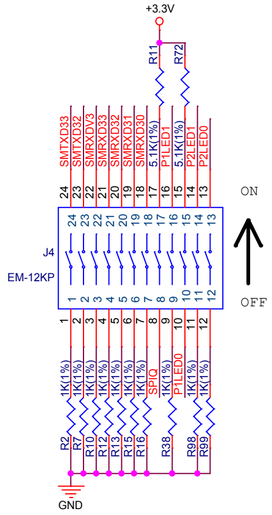

SMTXD33	RMII Clock selection
0	Disable REFCLKO
1(Default)	Enable REFCLKO

SMTXD32	X1 Clock selection
0	50 MHz to X1
1(Default)	25 MHz to X1

SMRXDV3	Force Duplex mode
0	Half-Duplex
1(Default)	Full-Duplex

SMRXD33	Auto-negotiation
0	Disable
1(Default)	Enable

SMRXD32	Force Speed
0	10BT
1(Default)	100BT

SMRXD31	Force Duplex mode
0	Half-Duplex
1(Default)	Full-Duplex

SMRXD30	Force Flow Control
0	Disable
1(Default)	Enable

SPIQ	Force Flow Control
0(Default)	Disable
1	Enable

P1LED1	Force Speed
0	10BT
1(Default)	100BT

P1LED0	Auto-negotiation
0(Default)	Disable
1	Enable

[P2LED1, P2LED0]	Serial Bus Configuration
[0,0]	I2C Host (EEPROM) mode
[0,1]	I2C Slave mode
[1,0]	SPI Slave mode
[1,1](Default)	SMI Mode

ETHERNET SIGNALS

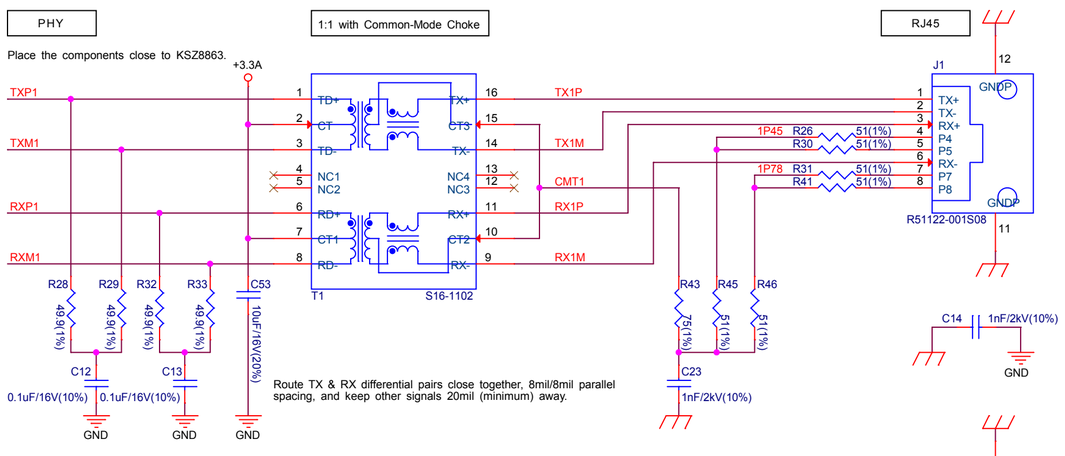

Route TX & RX differential pairs close together, 8mil/8mil parallel spacing, and keep other signals 20mil (minimum) away.

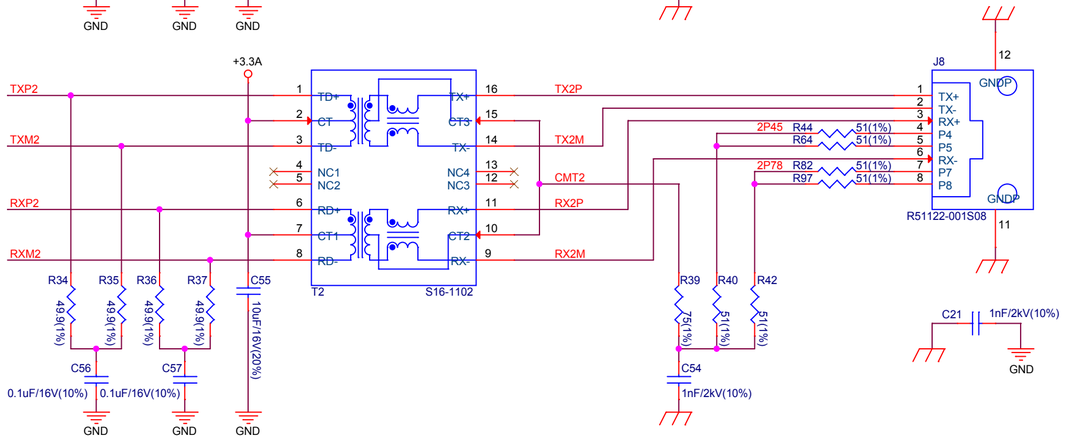

Reserved ESD Protection

Chip Side Protection (test option)

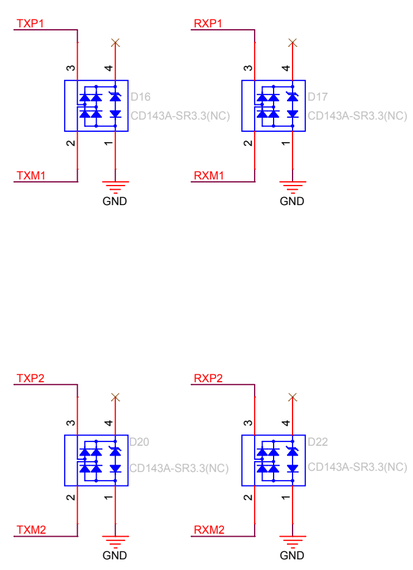

NC: No Component.

RJ-45 Side Protection (test option)

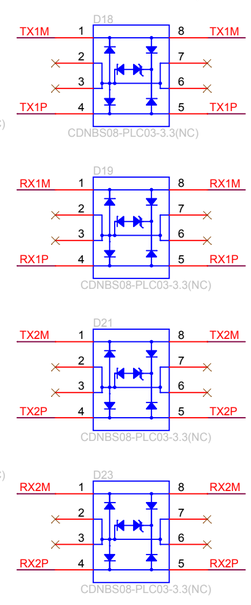

Place near RJ-45 connector.

GPIO Map:

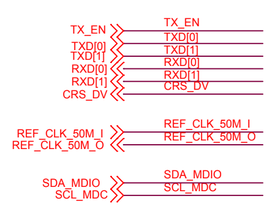

RMII:
TX_EN:GPIO21
TXD[0]:GPIO19
TXD[1]:GPIO22
RXD[0]:GPIO25
RXD[1]:GPIO26
CRS_DV:GPIO27

REF_CLK_50M_I:GPIO0
REF_CLK_50M_O:GPIO17/GPIO16

SMI/I2C:
SDA_MDIO:GPIO18
SCL_MDC:GPIO23

SPI:
SPISN:GPIO32
SPIQ:GPIO33

OSC_EN:GPIO2

RESET_N:GPIO5

ESPRESSIF
乐鑫信息科技（上海）股份有限公司

Title			
	<ESP32_Ethernet_TestBoard_For_KSZ8863RLL>		
Size C	Page Name <02 : PHY_IP101GRI>	Rev V1.1	Confidential and Proprietary
Date: Tuesday, May 31, 2022		Sheet 2 of 3	

MAC ESP32 Module

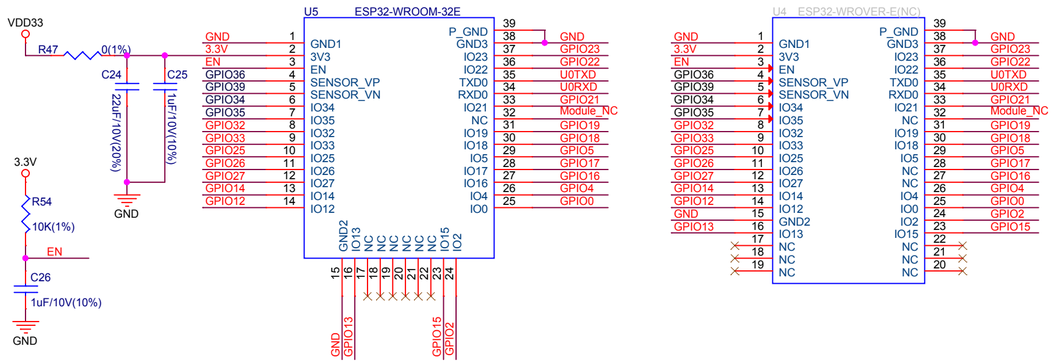

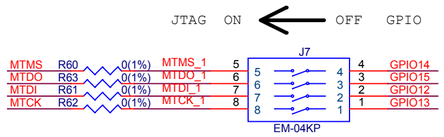

RMII:
REF_CLK_50M_I:GPIO0
REF_CLK_50M_O:GPIO17/GPIO16

TX_EN:GPIO21
TXD[0]:GPIO19
TXD[1]:GPIO22

RXD[0]:GPIO25
RXD[1]:GPIO26
CRS_DV:GPIO27

SMI/I2C:
SDA_MDIO:GPIO18
SCL_MDC:GPIO23
SPI:
SPISN:GPIO32
SPIQ:GPIO33

RESET_N:GPIO5

OSC_EN:GPIO2

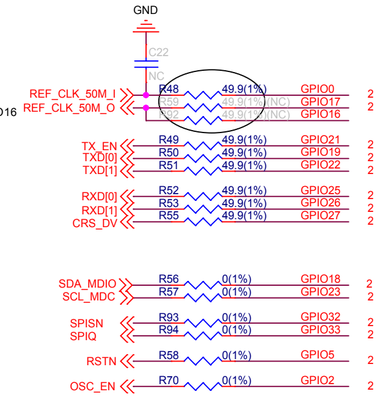

USB to UART/JTAG

Please place these caps close to VCORE/VCCIO

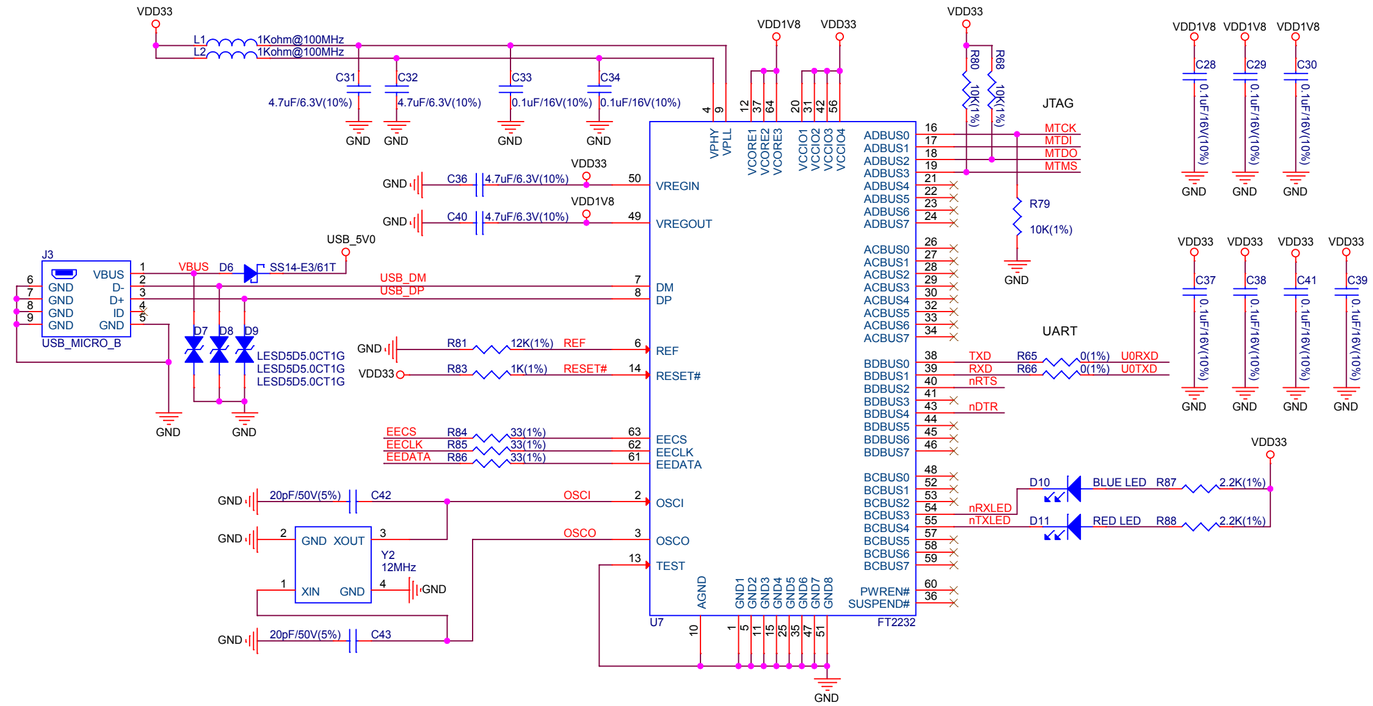

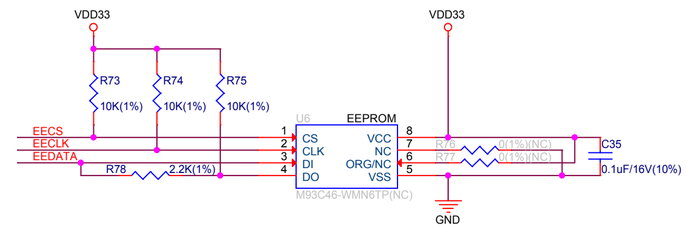

Auto Prog & Debug

RESET:

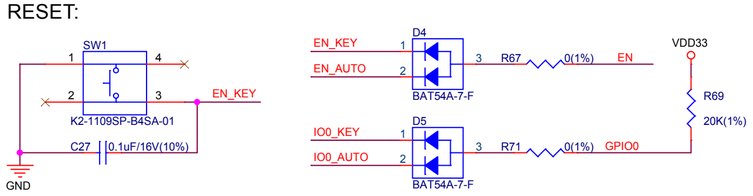

UART DOWNLOAD:
GPIO0->0,GPIO2->0

FLASH BOOT:
GPIO0->1

BOOT MODE:

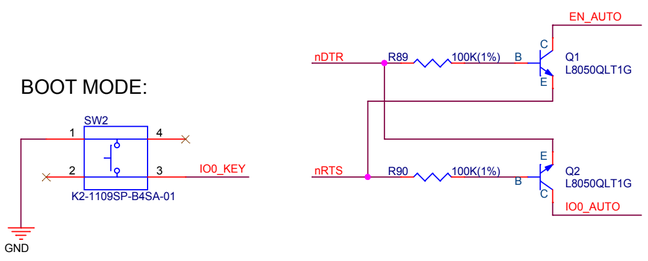

Auto program

DTR	RTS-->	EN	IO0
1	1	1	1
0	0	1	1
1	0	0	1
0	1	1	0

External 5V Power

5V to 3.3V

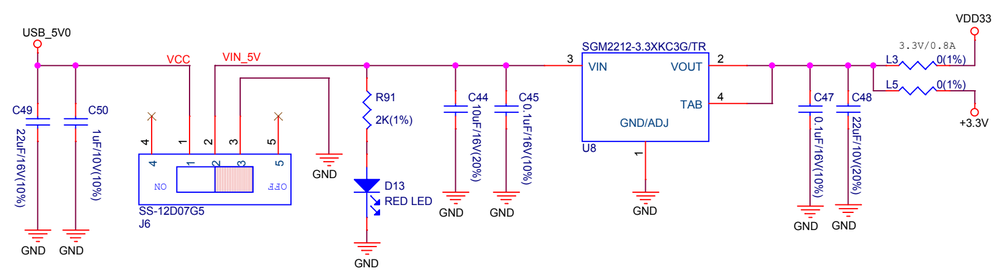

Test Point

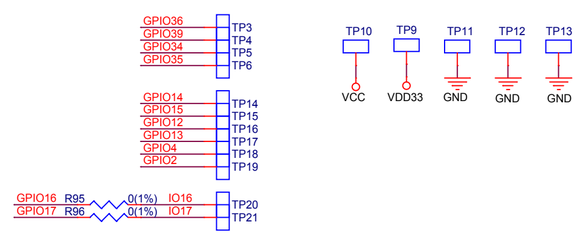

Mounting Hole

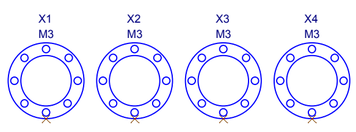

ESPRESSIF
乐鑫信息科技（上海）股份有限公司

Title	<ESP32_Ethernet_TestBoard_For_KSZ8863RLL>		
Size C	Page Name 03 : MAC_ESP32&Power&Debug	Rev V1.1	Confidential and Proprietary
Date: Tuesday, May 31, 2022		Sheet 3 of 3	