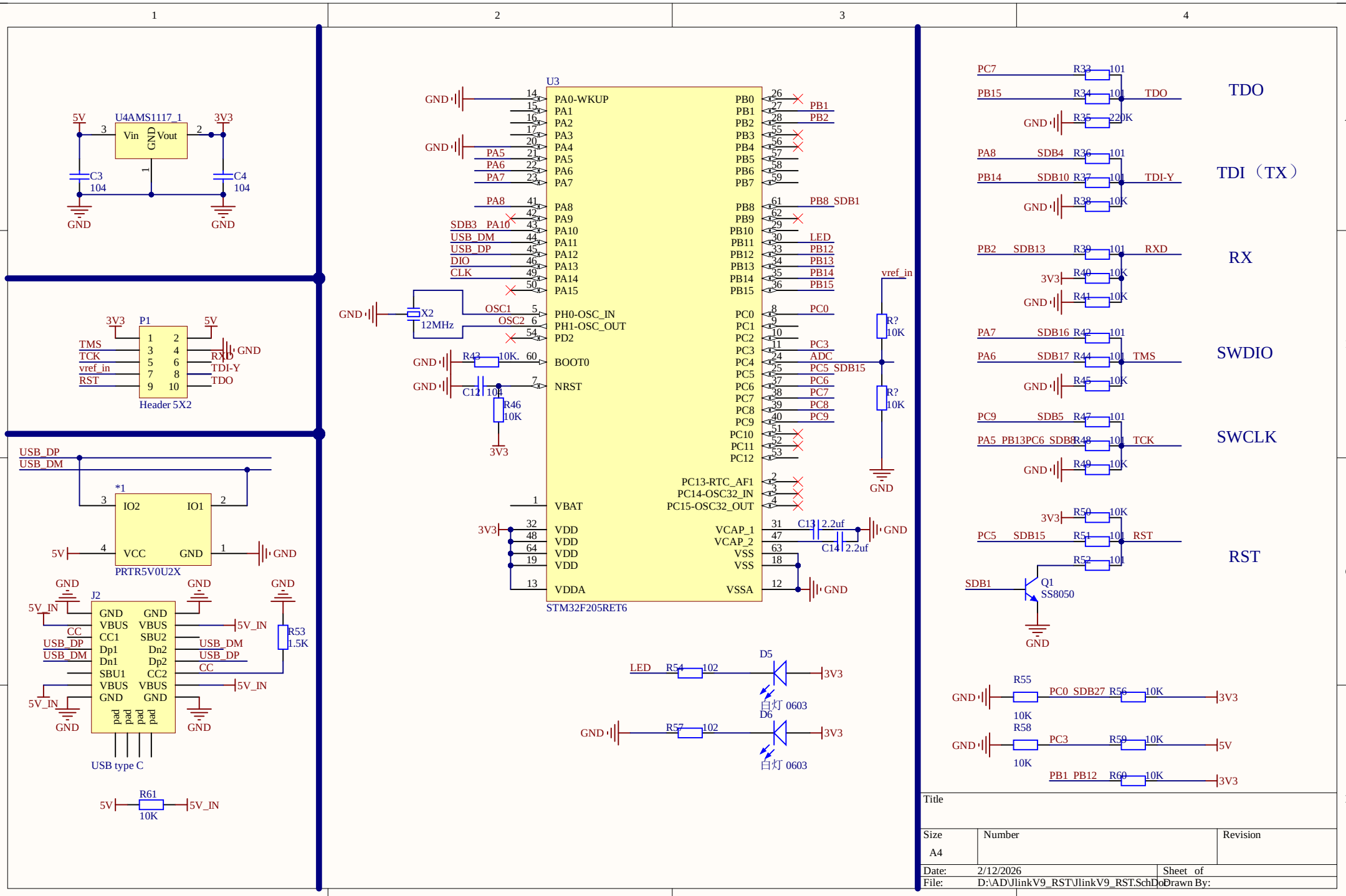
U4AMS1117_1
Vin
Vout
GND
5V
3V3
C3
104
C4
104
P1
Header 5X2
TMS
TCK
vref_in
RST
RXD
TDI-Y
TDO
USB_DP
USB_DM
*1
IO2
IO1
VCC
PRTR5V0U2X
J2
USB type C
5V_IN
CC
SBU1
SBU2
CC2
R53
1.5K
R61
10K
U3
STM32F205RET6
PA0-WKUP
PH0-OSC_IN
PH1-OSC_OUT
BOOT0
NRST
VBAT
VDD
VDDA
VCAP_1
VCAP_2
VSS
VSSA
PC13-RTC_AF1
PC14-OSC32_IN
PC15-OSC32_OUT
X2
12MHz
OSC1
OSC2
R43
10K
C12
104
R46
10K
C13
2.2uf
C14
2.2uf
R?
10K
vref_in
LED
R54
102
D5
白灯 0603
R57
102
D6
白灯 0603
TDO
TDI（TX）
RX
SWDIO
SWCLK
RST
R33
R34
R35
220K
R36
R37
R38
R39
R40
R41
R42
R44
R45
R47
R48
R49
R50
R51
R52
Q1
SS8050
R55
R56
R58
R59
R60
PC0_SDB27
PC3
PB1_PB12
PB8_SDB1
PC5_SDB15
PC9_SDB5
PA5_PB13PC6_SDB8
Title
Size
A4
Number
Revision
Date:
2/12/2026
Sheet of
File:
D:\AD\JlinkV9_RST\JlinkV9_RST.SchDoc
Drawn By: