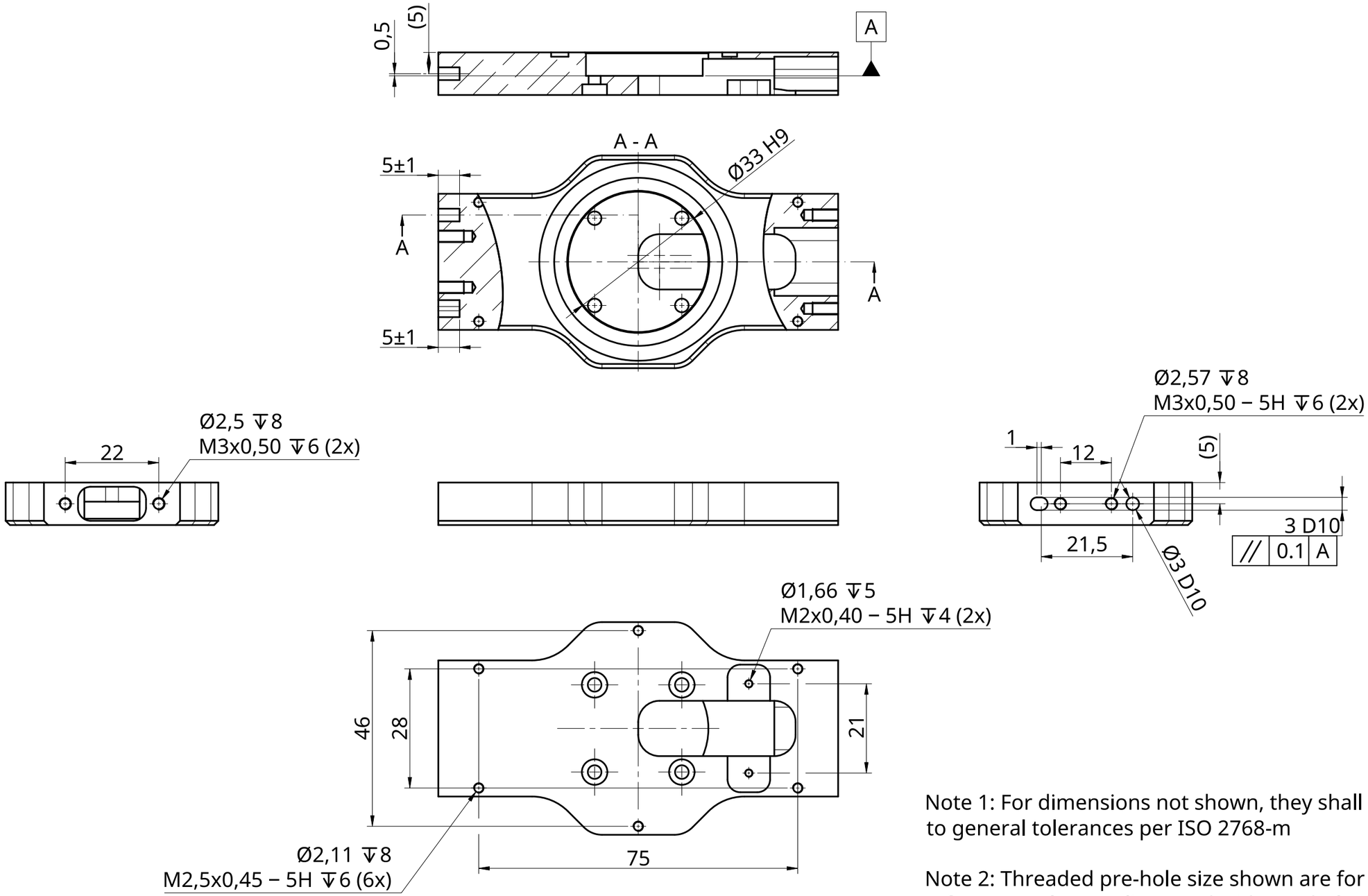

Note 1: For dimensions not shown, they shall conform to general tolerances per ISO 2768-m

Note 2: Threaded pre-hole size shown are for reference only, supplier can decide pre-hole drill size

		NAME	SIGNATURE	DATE
UNLESS OTHERWISE SPECIFIED, DIMENSIONS ARE IN MILLIMETERS	DRAWN	JASON HUANG		2024-04-06
ANGULAR = ± °	CHECKED			
SURFACE FINISH √	APPROVED			
DO NOT SCALE DRAWING				
BREAK ALL SHARP EDGES AND REMOVE BURRS				
FIRST ANGLE PROJECTION	MATERIAL		FINISH	

TITLE

SIZE	DWG NO.	REV.
A3		

SCALE	WEIGHT	SHEET
1:1		1 of 1