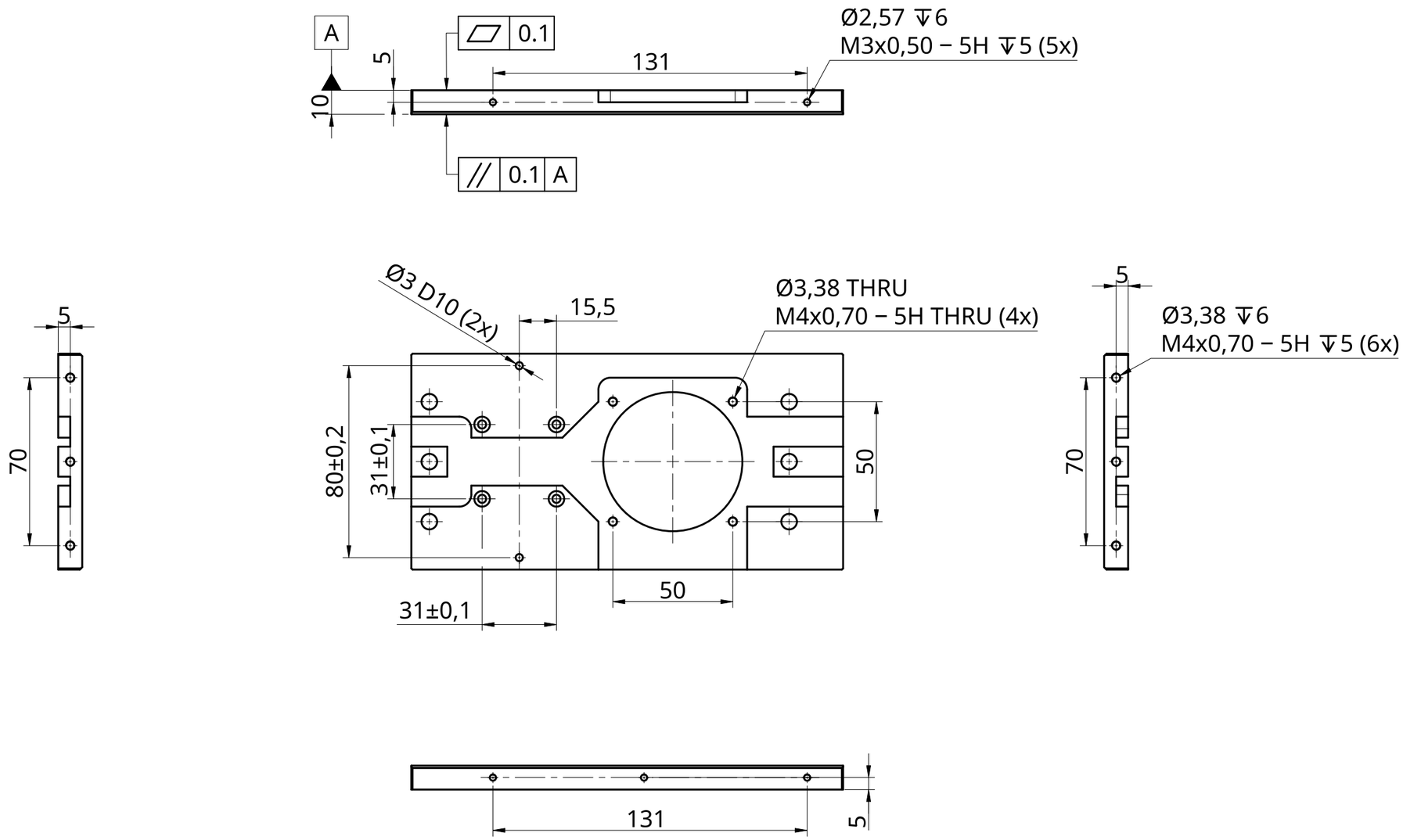

Note 1: For dimensions not shown, they shall conform to general tolerances per ISO 2768-m

Note 2: Threaded pre-hole size shown are for reference only, supplier can decide pre-hole drill size

UNLESS OTHERWISE SPECIFIED, DIMENSIONS ARE IN MILLIMETERS ANGULAR = ± ° SURFACE FINISH √		NAME	SIGNATURE	DATE
	DRAWN	JASON HUANG		2024-04-19
	CHECKED			
	APPROVED			
DO NOT SCALE DRAWING				
BREAK ALL SHARP EDGES AND REMOVE BURRS				
FIRST ANGLE PROJECTION	MATERIAL		FINISH	

TITLE

SIZE A3	DWG NO.	REV.
SCALE 1:2	WEIGHT	SHEET 1 of 1