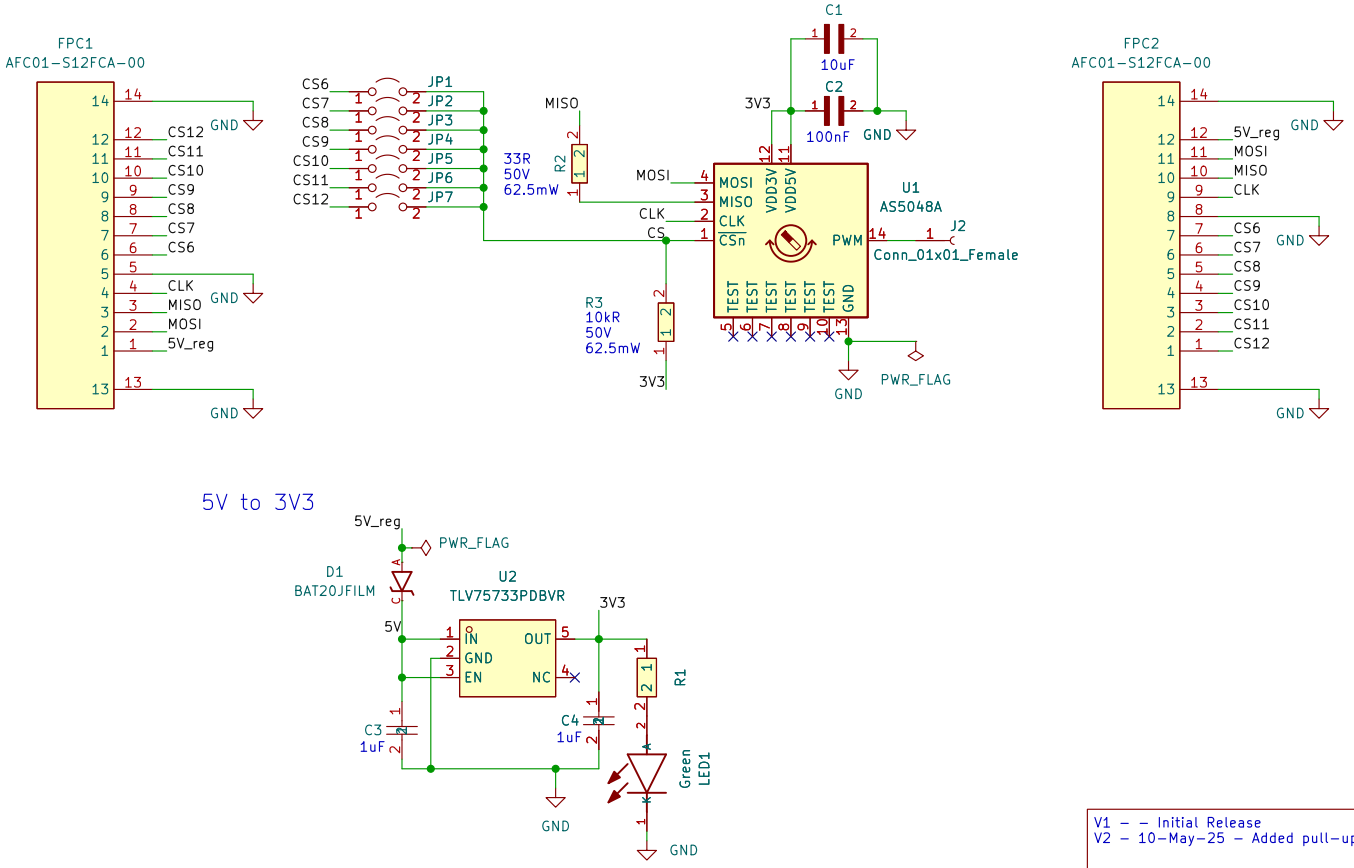

V1 – – Initial Release
V2 – 10-May-25 – Added pull-ups R for CS line

Sheet: /
File: Rotary_Encoder_AS5048A_V8.kicad_sch

Title:

Size: A4	Date:	**Rev:**
KiCad E.D.A. kicad (6.0.7)		Id: 1/1