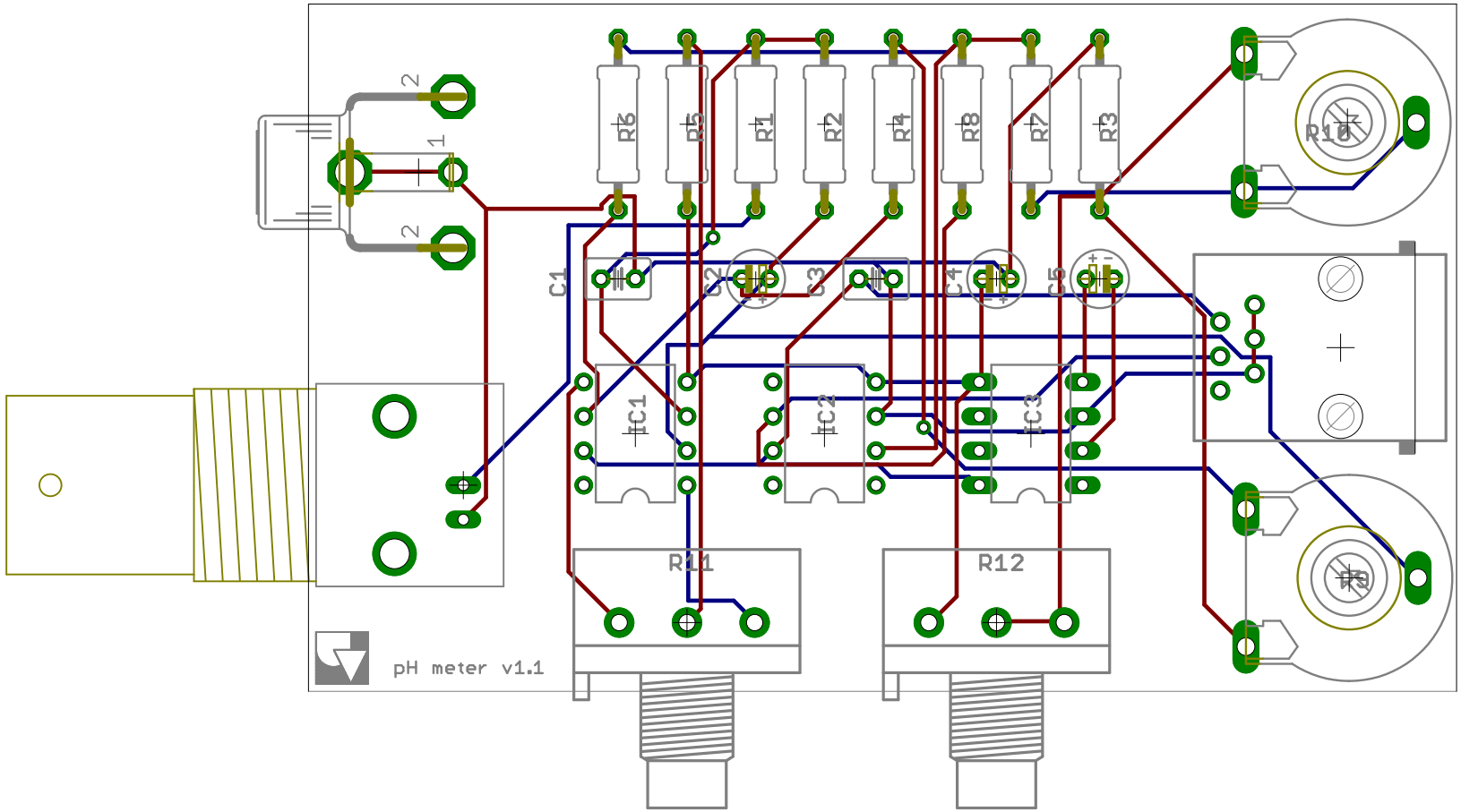


1/12/12 13:21 f=2.00 /Volumes/document/luc/electronic/eagle/lego/I2C/4-20mA/pH-meter-v1-1.brd