1508, MMZEN-288-003, 001

NACHi

MANIPULATOR INSTRUCTION MANUAL

MZ04-01/MZ04E-01 [CFD] MZ04D-01/MZ04DE-01 [CFD]

3rd edition

- Before attempting to operate the robot, please read through this operating manual carefully, and comply with all the safety-related items and instructions in the text.
- The installation, operation and maintenance of this robot should be undertaken only by those individuals who have attended one of our robot course.
- When using this robot, observe the low related with industrial robot and with safety issues in each country.
- This operating manual must be given without fail to the individual who will be actually operating the robot.
- Please direct any queries about parts of this operating manual which may not be completely clear or any inquiries concerning the after-sale service of this robot to any of the service centers listed on the back cover.

NACHI-FUJIKOSHI CORP.

This manual explains the robot specifications, structure of each part and the basic handling precautions for inspection and maintenance to maintain function of the robot for a long period.
It is recommended that this manual is read by robot utilization planners and installation staff as well as inspectors and maintenance staff for robot operation and the robot is handled only after understanding this manual completely.

Chapter 1 Basic specifications 1-1
1.1 List of basic specifications 1-1
1.2 Robot dimensions and working envelope 1-2
1.3 Details of payload mounting section 1-4
1.4 Application wiring and piping diagram 1-5

Chapter 2 Precautions for handling 2-1
2.1 Names of robot components 2-1
2.2 Transport procedure 2-2
2.3 Installation procedure 2-3
2.4 Allowable wrist load 2-8

Chapter 3 Maintenance 3-1
3.1 Inspection items and periods 3-1
3.2 Maintenance of belt 3-2
3.2.1 Inspection of belt 3-2
3.2.2 Tension adjustment of belt 3-5
3.2.3 Replacement of belt 3-7
3.2.4 Encoder reset 3-8
3.2.5 Encoder correction 3-8
3.3 Battery replacement 3-10
3.4 Robot body replacement 3-11
3.5 Forcible brake release (option) 3-12

Chapter 4 Recommended spare parts and special tools for maintenance 4-1

Chapter 5 Wire-harness connection diagram 5-1

For safe use of the robot

Read this manual carefully prior to installation, operation, maintenance, or inspection and use equipment correctly. Use the robot only after fully understanding the equipment, all safety points, and comments/suggestions.

- Instruction manual “Precautions for handling industrial robots”
- Instruction manual “SETUP” (for FD controller) “Chapter 1 Point on safety”

The following table shows the importance of the following tags/marks in this Operation manual:

DANGER	Case where a mistake made in handling is likely to cause the user to be exposed to the danger of death or serious injury and where the degree of the urgency (imminence) of the warning given for the danger to occur is at the high end of the scales (including high-level danger).
WARNING	Cases where a mistake made in handling is likely to cause the user to be exposed to the danger of death or serious injury.
CAUTION	Cases where a mistake made in handling is likely to cause the user to be exposed to the danger of minor injuries or of property damage only.

And, the other notes use a mark like the one shown as below.

IMPORTANT	This indicates the other special notes.

Labels and marks on manipulator

Following labels and marks are affixed on manipulator. Their location and their existence itself may vary according to the robot type.

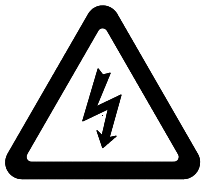	This mark indicates a power supply inlet for the robot. Motor power and detecting device power is supplied to connectors and terminal blocks under various connector covers on the robot baring this mark. Do not touch connectors or terminal blocks directly or indirectly with conductive items with mains power supplied, as electric shock may occur. If connectors or terminal blocks are removed with mains power on, electric shock or malfunction of the robot may result. Turn OFF main power on the controller when performing any maintenance.
	This mark indicates hot parts on the robot. Carelessly touching labeled hot parts may result in serious burns.
	This mark indicates area operators may get caught by the robot. Places bearing this mark should never be touched. Brakes can be released not only during teaching but also while the motors are OFF. Take adequate steps to prevent your hands or other parts of your body from being pinched when these areas are touched during maintenance work, etc.

Another caution and warning labels;
If these labels are ignored and, for example, some part is disassembled, this may cause fatal or serious accidents.

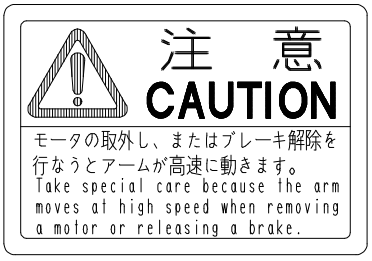

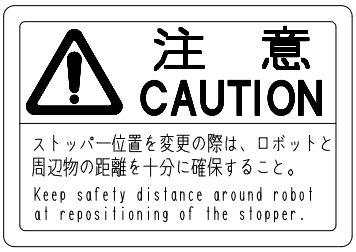

Protection labels;

Chapter 1 Basic specifications

1.1 List of basic specifications

Item		Specifications			
Robot model		MZ04-01	MZ04D-01	MZ04E-01	MZ04DE-01
Construction		Articulated			
Number of axis		6			
Drive system		AC servo motor			
Max. working envelope	Axis 1	±170 °			
	Axis 2	-145 ～ 90 °			
	Axis 3	-125 ～ 280 °			
	Axis 4	±190 °			
	Axis 5	±120 °			
	Axis 6	±360 °			
Max. speed *6	Axis 1	480 °/s		200 °/s	
	Axis 2	460 °/s		150 °/s	
	Axis 3	520 °/s		190 °/s	
	Axis 4	560 °/s		560 °/s	
	Axis 5	560 °/s		560 °/s	
	Axis 6	900 °/s		900 °/s	
Max. pay load	Wrist	4 kg			
Allowable static load torque	Axis 4	8.86 N･m			
	Axis 5	8.86 N･m			
	Axis 6	4.9 N･m			
Allowable moment of inertia *1	Axis 4	0.2 kg･m^2			
	Axis 5	0.2 kg･m^2			
	Axis 6	0.07 kg･m^2			
Position repeatability *2		±0.02mm			
Max. reach		541mm			
Air tubes		ϕ6×2			
Application signal wires		10 wires			
Installation *3		Floor / Wall / Tilted / Inverted mount		Floor / Inverted mount	
Ambient conditions		Temperature: 0 to 45 ºC *4 Humidity: 20 to 85%RH (No dew condensation allowed) Vibration to the installation face: Not more than 0.5G (4.9 m/s^2)			
Environment performance *5		IP40 equivalent	IP67 equivalent	IP40 equivalent	IP67 equivalent
Cleanliness *7		ISO 14644-1 Class 4 equivalent			
Noise *8		70 dB			
Robot mass		26kg		25kg	

1[rad] = 180/π[°], 1[N･m] = 1/9.8[kgf･m]
- On controller display, axis 1 to 6 is displayed as J1 to J6 for each.
- The specification and externals described in this specifications might change without a previous notice for the improvement.
- Explosion-proof is not available.

*1: The Allowable moment of inertia of a wrist changes with load conditions of a wrist. *2: This value conforms to "JIS B 8432". *3: Working envelop is limited when wall mount and angle mount. (Example; axis 1 working envelop is ±30° in case of wall mount) *4: Permitted height is not higher than 1,000m above sea level. If used in higher place, permitted temperature is affected by height. *5: Liquid such as organic compound, acidity, alkalinity, chlorine or gasoline cutting fluid which deteriorates the seal material are not available to use. *6: The "Max. speed" in this table is the available maximum value and will change depending on the work-program and the wrist load condition. *7: If this cleanliness needs to be kept, use robot in a clean room where down flow air exists. Robot is not dust-tight packaged. If robot is used in clean room, abrasive or fine particles shall be removed before carrying it in clean room. *8: Robot noise is A-weighted equivalent sound level measured under “JIS Z 8737-1” (ISO 11201) with max. payload and max. speed.

1.2 Robot dimensions and working envelope

【MZ04-01】【MZ04D-01】【MZ04E-01】【MZ04DE-01】

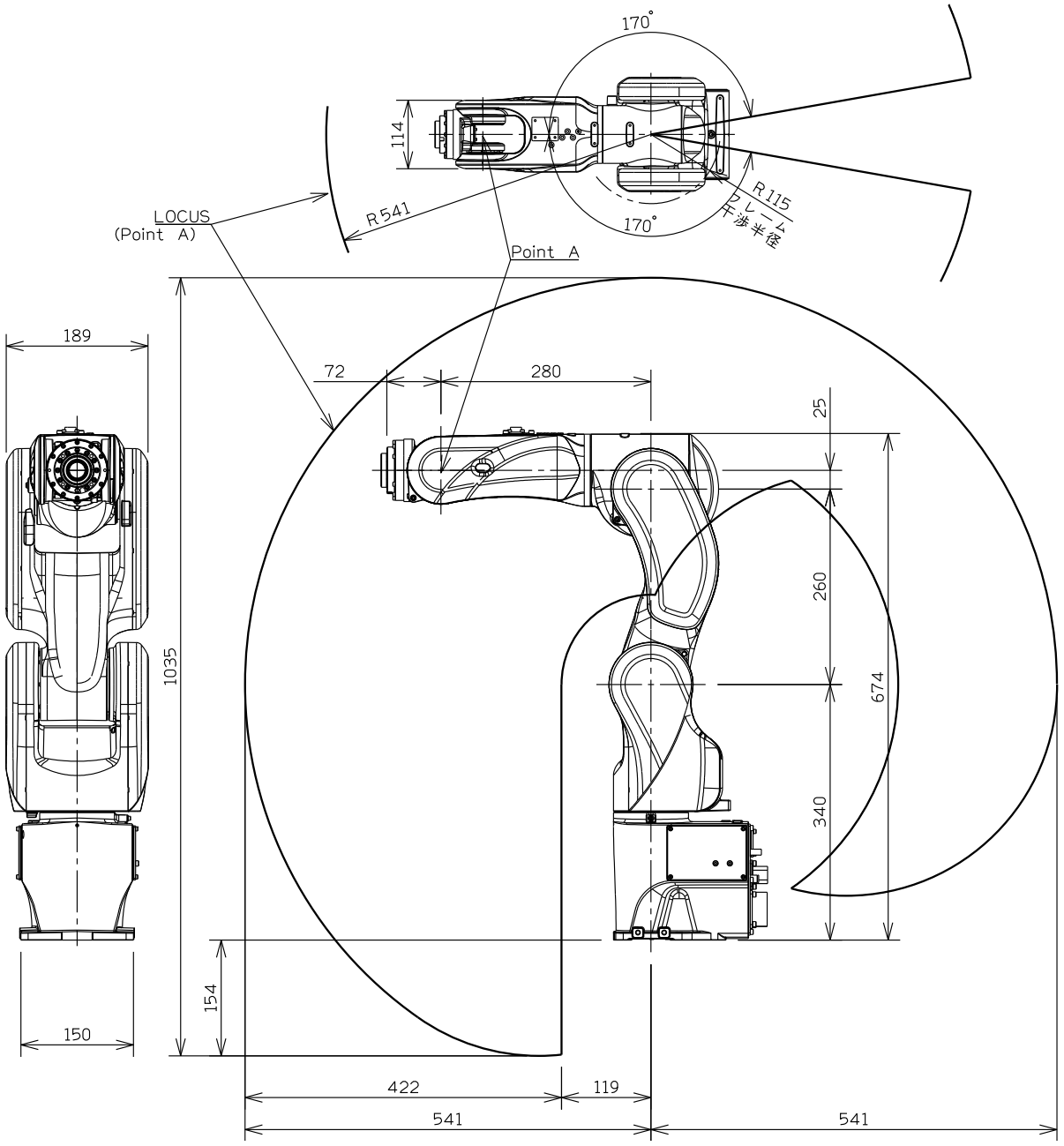

【MZ04-01】【MZ04D-01】 Wall mount

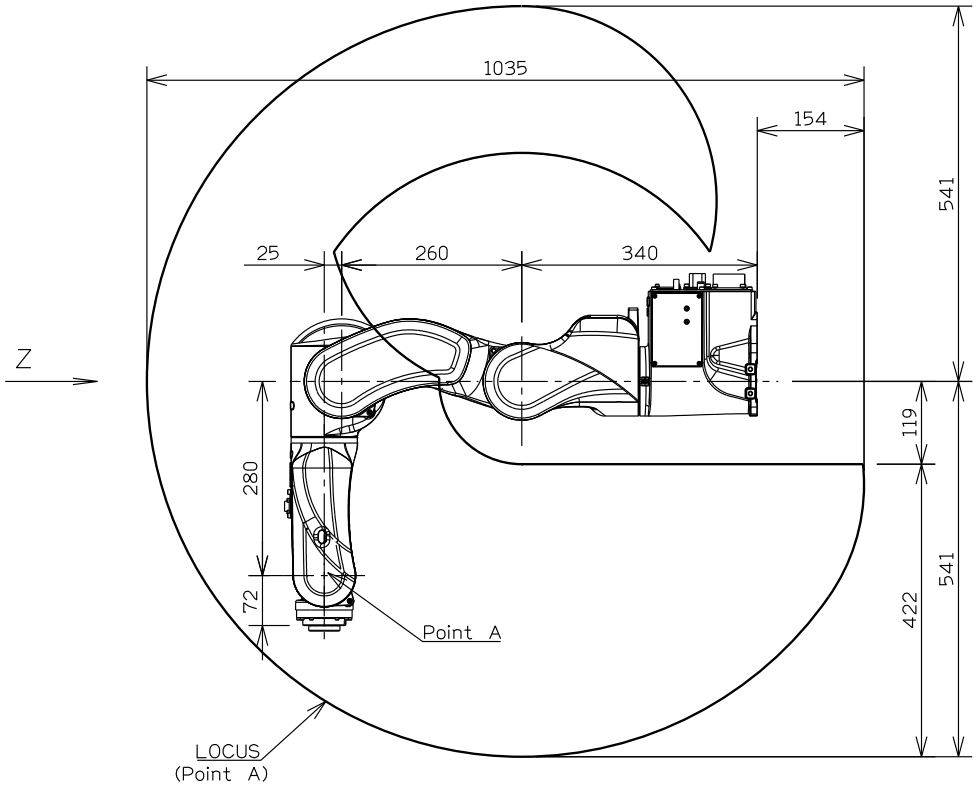

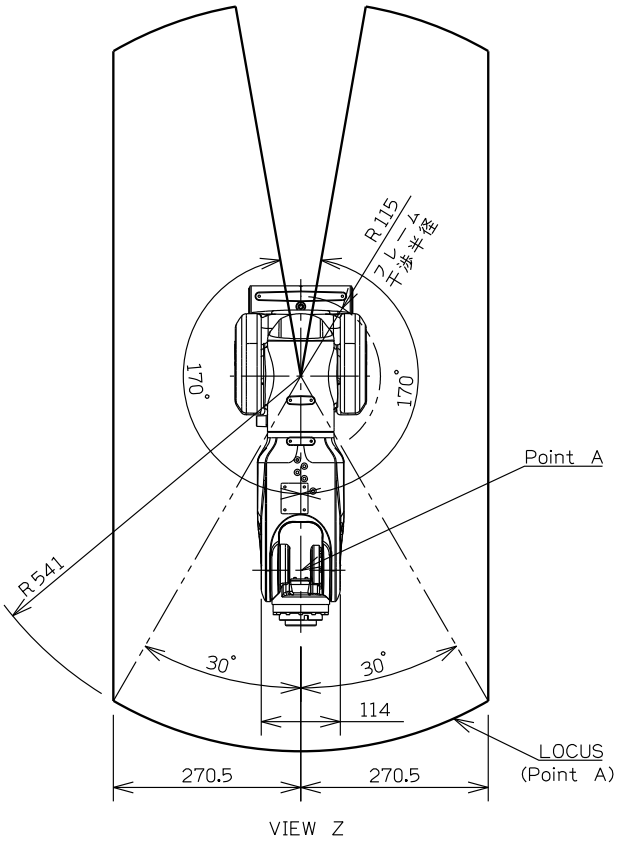

This figure shows the working envelope in case that standard installation robot (MZ04-*-01-*0*) is installed at wall mount. In this case, software parameter needs to be changed to restrict working envelope as indicated above. If wall mount installation robot (MZ04-*-01-*W*) is installed at wall mount, working envelope is same as that of standard installation robot at floor mount.

1.3 Details of payload mounting section

CAUTION	Be sure to screw M5 tool fixing bolts in the wrist not deeper than the screw depth in the mounting face. Screwing the bolts deeper than the screw depth may damage the wrist.

【MZ04-01】【MZ04D-01】【MZ04E-01】【MZ04DE-01】

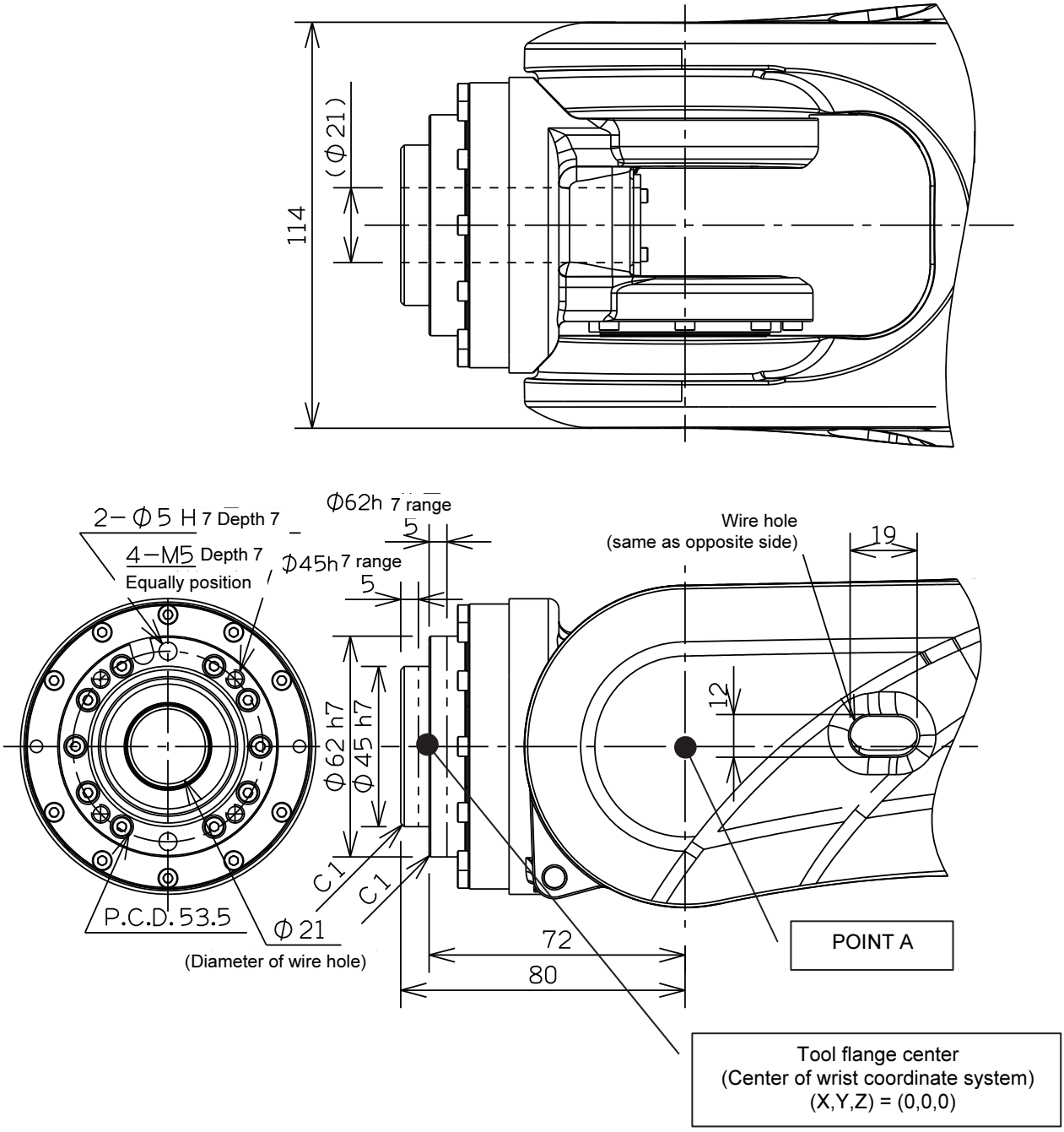

1.4 Application wiring and piping diagram

■ **When solenoid valve (option) is mounted**

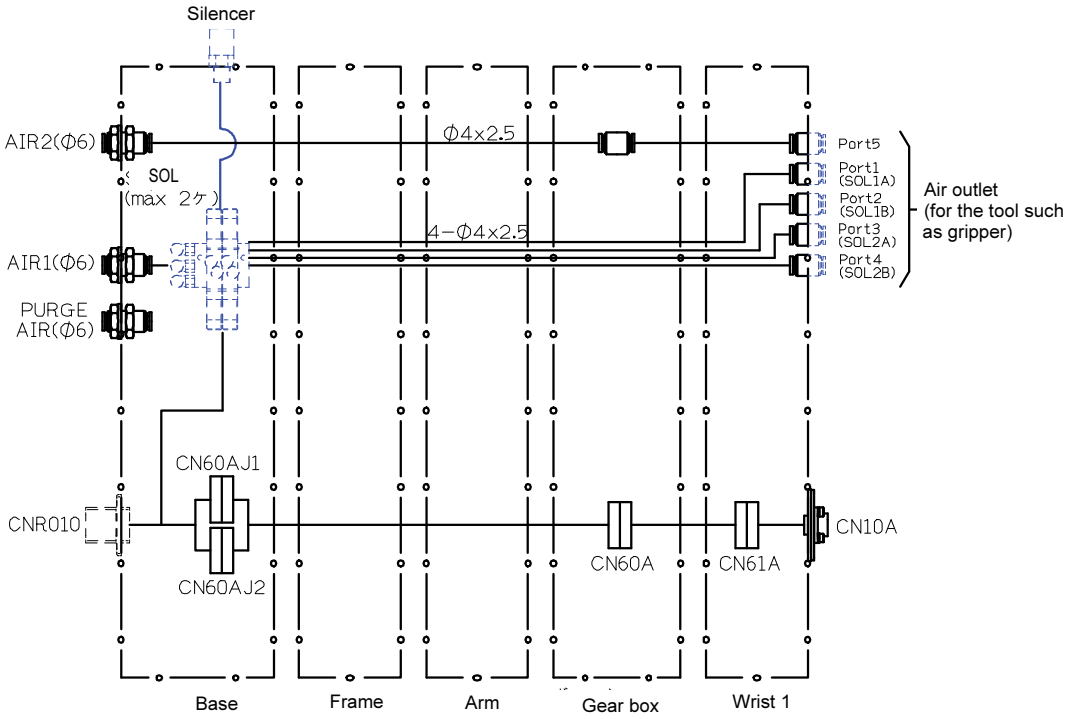

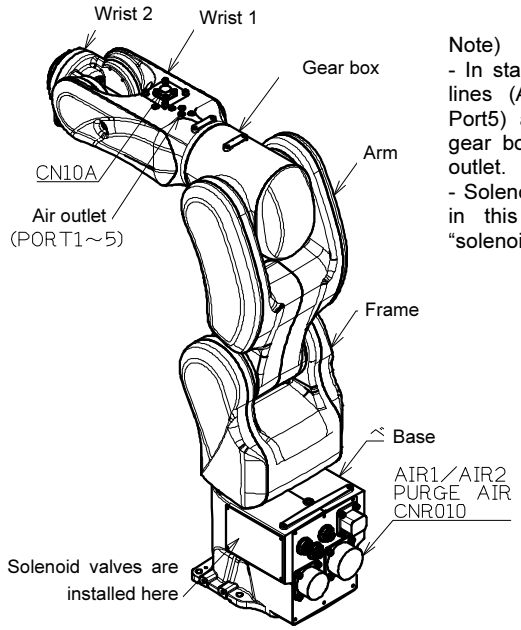

Note)
- In standard specification, only 2 air lines (AIR1 to Port1 and AIR2 to Port5) are connected directly inside gear box. Plugs are attached on air outlet.
- Solenoid valves and silencer written in this figure are mounted when “solenoid valve” option is selected.

■ **Detailed diagram of the application connectors (standard)**

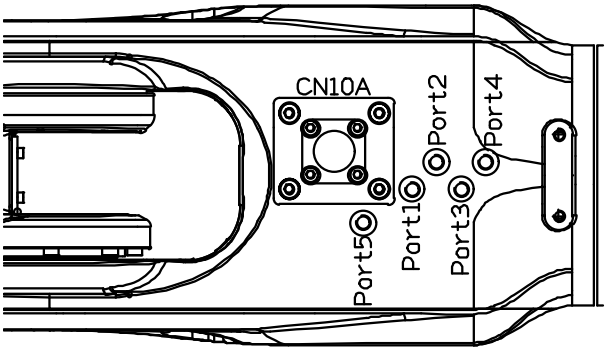

	6	5	4	3	2	1
D	G	A20	A19	A18	A17	A16
C		A15	A14	A13	A12	A11
B	A22	A10	A09	A08	A07	A06
A	A21	A05	A04	A03	A02	A01

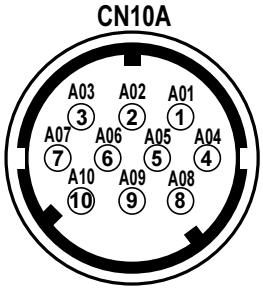

Connector CNR0101 on base
Tyco AMP 1939839-1, 1939840-1, 1903112-2
Partner connector type
Tyco AMP 1939847-1, 1939850-1, 1827570-2

Connector CN10A on wrist 1
JAE JN1AS10ML1-R
Partner connector type
JAE JN1DS10SL2

Chapter 2 Precautions for handling

2.1 Names of robot components

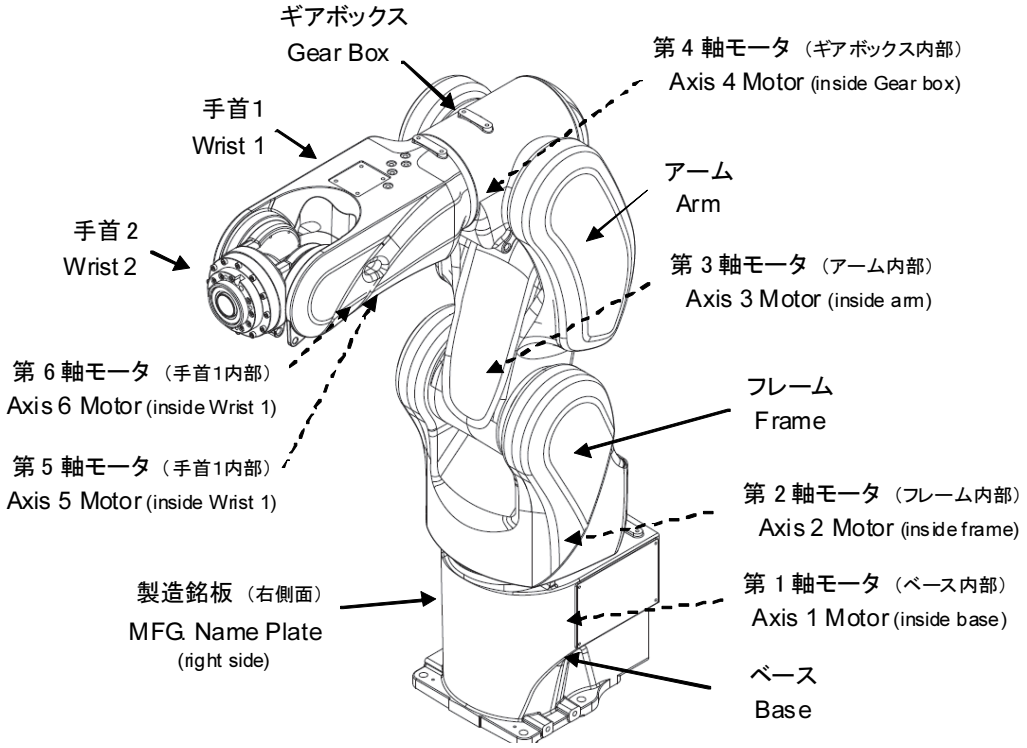

Manufacturing name plate

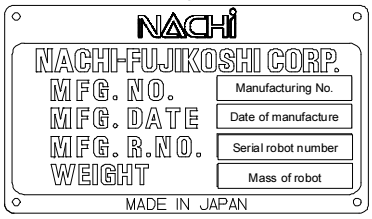

(Mass of robot is only for CE specification)

Axis name and operating key

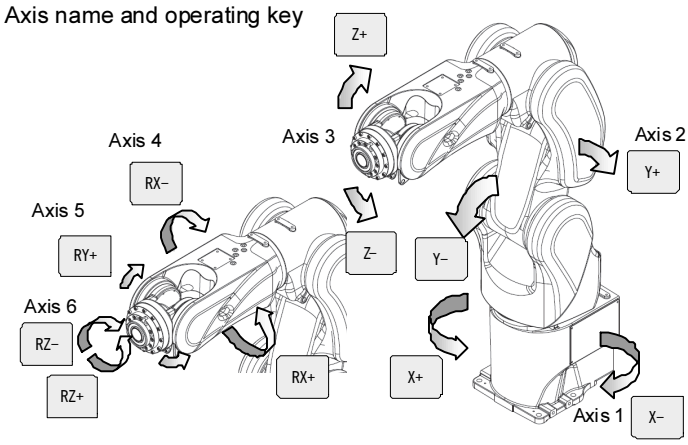

2.2 Transport procedure

WARNING	The robot and controller must be transported by personnel who have licenses required for slinging work, crane operation, forklift truck operation, and others.
WARNING	Before transporting the robot and the controller, be sure to check the weight of them and the transportation procedures which are described in the Maintenance Service Manual of the robot.
WARNING	When hanging the robot or the controller, please follow the instructions described in the maintenance manual of them. If the work is done by following the other methods, the robot or the controller may fall down and results accidents.
WARNING	During transport of the robot and controller, pay utmost care not to cause damage to wirings. Furthermore, after installing the robot, take protective measures such as using protective covers so that the wirings will not be damaged by workers or other persons, or forklift trucks or else.

■ **Using a transportation brackets**

To transport the robot, make it a rule to use a crane.

Make the robot posture shown right and mount two carrier brackets to both sides of the robot frame. Then, lift the robot using four hanging wires.

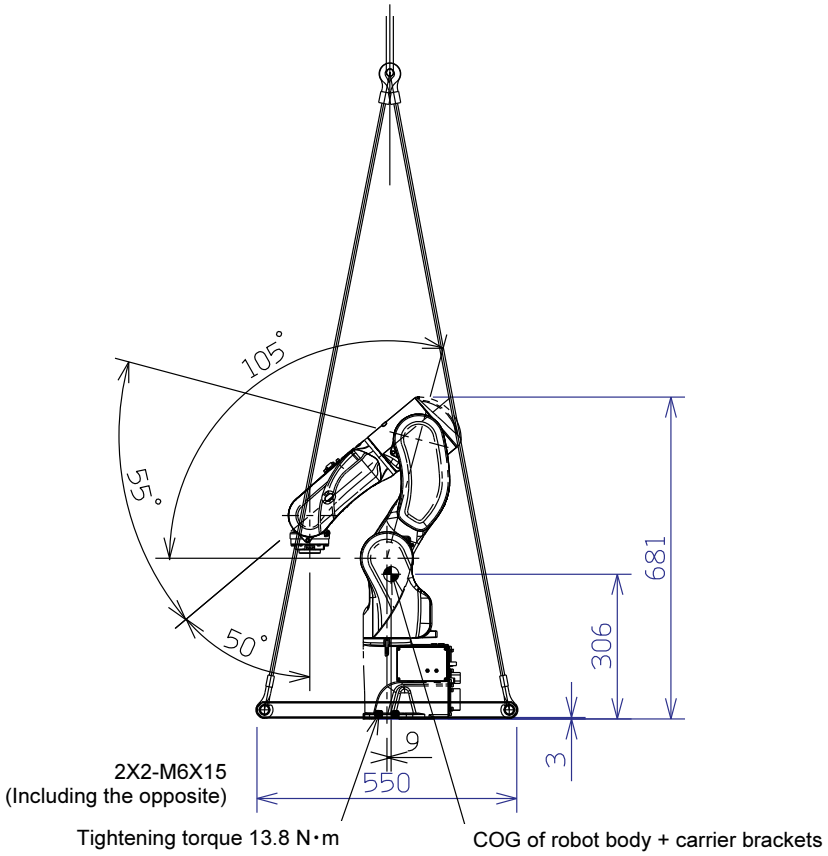

CAUTION	After installing the robot, remove the transportation brackets.

2.3 Installation procedure

The installation location and the installation procedure of the robot are critical factors to maintain robot functions. The ambient conditions of installation location not only have influence on the life of mechanical sections of the robot, but also get involved in safety issues. Consequently, strictly observe the environmental conditions shown below. Furthermore, utmost care should be exerted for the installation procedure and the foundation for the robot in order to maintain the robot performance. Strictly observe the installation procedure for the robot provided below.

Installation

To install the robot, give it first priority to thoroughly consider safety of workers and take safety measures. The following section describes precautions for this purpose.

Safety measures against entry in the robot operating area

WARNING	While the robot is in operation, workers are in danger of coming in contact with the robot. To avoid that, install a **guard fence** so as to keep the worker away from the robot. Not doing so will cause the workers or other persons to accidentally enter the operating area, thus resulting in accidents.
DANGER	Guard fence Refer to information in ISO13857: Safety of machinery – Safety distances to prevent hazard zones being reached by upper and lower limbs 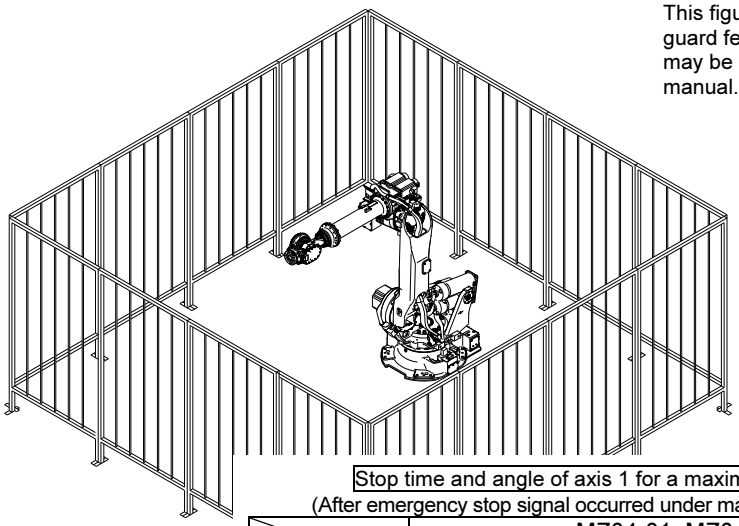 This figure shows the image of the guard fence. (Robot appearance may be different from that of this manual.) Stop time and angle of axis 1 for a maximum travel (After emergency stop signal occurred under maximum speed) | | MZ04-01, MZ04E-01, MZ04D-01, MZ04DE-01 | | Stop time | 0.38 [sec] | | Stop angle | 2.19 [rad] |
WARNING	The guard fence must have construction by which no one can easily get over or move the guard fence. Provide an access door for the guard fence that must be equipped with a **safety plug** and designed not to open unless the safety plug is unplugged. If above construction is not secured, someone can get in the guard fence, thus inducing a hazardous situation.
WARNING	Design the system so that **motor power is turned OFF** when safety plug is unplugged or access door is opened. This can make it possible to detect the entry of a person and atop the robot automatically. (The controller has an input signal of safety plug and to turn off the motor power.)
WARNING	Design the system so that **low-speed playback mode** will become functional in order to operate the robot with the safety plug unplugged. If the robot is operated at a high speed under the said condition, no one can escape from the robot, thus resulting in accidents. (The controller has an input signal to select low-speed playback mode.)
WARNING	Mount **Emergency Stop buttons** for the robot **in locations where workers are able to immediately press them**. If the workers are unable to immediately press the switch, accidents may result. (The controller has an input signal of emergency stop.)

WARNING	If no guard fence is installed, mount **photoelectronic switches and/or mat switches, etc.** at all entrances to the robot operating area in stead of safety plug. These switches make it possible to automatically stop the robot when anyone enters the guard fence.
WARNING	**Coat the floor** of the hazardous area (the robot operating area) **with color paint** to facilitate discrimination of the hazardous area.

Safety measures against the robot and peripheral equipment

WARNING	In order to connect the primary power supply to the controller and the peripheral equipment, check to be sure that the power on the supply side is turned OFF. Otherwise it will create a hazardous situation resulting in electric shocks since high voltages such as 100VAC, 200VAC, or 400VAC are applied.
WARNING	Do not install the operation part and the adjustment part in the robot operating area, such as locations in which a person can get caught in the robot. Install the robot control panel, interlock panel, and all other operation panels so that they can be operated **outside the guard fence**.
WARNING	To install an operation stand, mount an **Emergency Stop button on the operation stand**. If any abnormality occurs while the robot is being operated by operation stand, the robot will be able to make an emergency stop through pressing this switch.
WARNING	Do not route wirings, piping, and the like among the robot, control panel, interlock panel, and others in such a manner that workers will stub their toes over them or forklift trucks will directly **tread** them. Otherwise it may cause workers to topple over or the wirings to be broken, thus resulting in accidents.
WARNING	Do not install the control panel, interlock panel, operation stand, or else in places from which the movements of the robot are **out of sight**. When the robot movements go out of sight, even if an abnormality occurs in any movement, you will delay in taking notice of the abnormality, thus resulting in a disaster. Furthermore, you will not find someone near the robot to cause an accident.
WARNING	If the robot operating area required is smaller than the operable area possessed by the robot, **limit the robot operating area**. The area can be limited by using the software limit, limit switch, and mechanical stopper. Even if the robot exceeds the normal operating area due to an abnormality, this function will enable the robot to stop before initiating operation.
WARNING	Install **light shielding boards, enclosures**, and others to the extent that robot movement can be seen in directions in which workers may be exposed to spatters during welding. Otherwise it may cause injury to workers with welding arcs, spatters, or else.
WARNING	Provide **a large and highly visible display** of automatic and manual mode indicating the operating status of the robot so that it can be recognized even from locations at some distance. Furthermore, it is effective to provide audible alarm using a buzzer or announcement to alert workers to the initiation of automatic operation, thus facilitating awareness of automatic operation in progress from distant locations.
WARNING	Eliminate **protrusions** from the peripheral equipment and the like of the robot to a minimum. If necessary, be sure to cover them up. Otherwise it may induce a hazardous situation when a worker touches them or is surprised with a sudden movement of the robot to topple over.
WARNING	Do not attempt to install the robot so that a worker will need to **put his/her hands in the guard fence** to carry in or out workpieces. There may be cases where the robot moves when the worker put his/her hands in the guard fence.

Safety measures against installation work

WARNING	To install the robot, it is important to position the robot so that no workers will get pinched by the robot inside or around a device to use the robot. The robot must not come into contact with any peripheral equipment when operating in the maximum operating range with a tool mounted on it.
WARNING	Be sure to install the robot according to the specified procedure. Otherwise it will cause the robot to move or topple over while in operation, thus inducing an imminent hazardous situation.
WARNING	To make wire connections between the robot and the controller or the peripheral equipment, fully understand the connection procedure for proper wire connections. Making wire connections according to improper procedure will cause the robot to malfunction.
WARNING	Be sure to establish a proper ground for the robot. If equipment such as a welder that causes substantial noises is needed to use, establish the specified ground for the equipment.
WARNING	During transport or installation of the robot, pay utmost care not to cause damage to wirings. Furthermore, after installing the robot, take protective measures such as using protective guards so that the wirings will not be damaged by workers or other persons, or forklift trucks or else.
IMPORTANT	Robot is not dust-tight packaged. If robot is used in clean room, abrasive or fine particles shall be removed before carrying it in clean room. It is recommended that robot should be cleaned by swabbing with isopropyl alcohol (IPA). Use of other solvents or pure water could contribute rust or peel of coating materials.
IMPORTANT	It is to be noted that cleanliness of robot is worse if it has operated in poor conditions for a long time or if it has been left as it was.

■ Installation location and ambient conditions

Conditions (temperature, humidity, height and vibration) are written in “Chapter 1 Basic Specifications”. Further ambient conditions listed below must be observed.
(1) Location with the drainage structure so that swivel base is not flooded, when the liquid such as water or cutting fluid is splashed on the robot body
(2) Location with no flammable or corrosive fluid or gas.
(3) Type D grounding (the grounding resistance is 100Ω or less) is necessary.

■ Installation procedure

While robot moves, large reaction force is applied to the swiveling base from all directions. Consequently, the robot should be installed in such a manner that the foundation endures not only the static loads but also the reaction force caused by robot movement.
Repair uneven spots, cracks, and others on the floor, and then install the robot by following to the table below. If thickness of floor concrete is less than needed level, an independent foundation should be constructed. Inspect the foundation prior to the robot installation, and then construct the foundation, if necessary.

	Standard mount and Rear connection	Wall mount and Rear connection Any mount and Bottom connection
Thickness of floor concrete	Not less than 150 mm	
Installation parts *1	4 bolts of M 8 X 25 (JIS: Strength class 12.9) 4 plain washers of not less than 2.3 mm in thickness and HRC35 in hardness	4 bolts of M8 X 35 (JIS: Strength class 12.9) 4 plain washers of not less than 2.3 mm in thickness and HRC35 in hardness
Tightening torque *2	33.3 N·m	
Allowable repeated tensile *3	Approximately 800 N	

*1 : Installation parts are not accessory of robot.
*2 : Apply a coating of lubricating oil to the threaded parts of bolts, and then tighten bolts by using torque wrench to the specified tightening torque.
*3 : This tensile is per installation bolt when robot is installed with all bolts written in table above.

■ **Installation space**

To install the robot, lock the swiveling base of the robot.

WARNING	The mechanical stopper end is located in a position exceeding the specified working envelope (software limit) of axis 1. To install the safety fence, with consideration given to the wrist configuration and the shape of tool.
WARNING	On axis 1, 2 and 3, the robot working envelope can be regulated for safety. Optional part is necessary to enable this function.

Standard mount
Cable rear connection

MZ04-01-*00
MZ04D-01-*00
MZ04E-01-*00
MZ04DE-01-*00

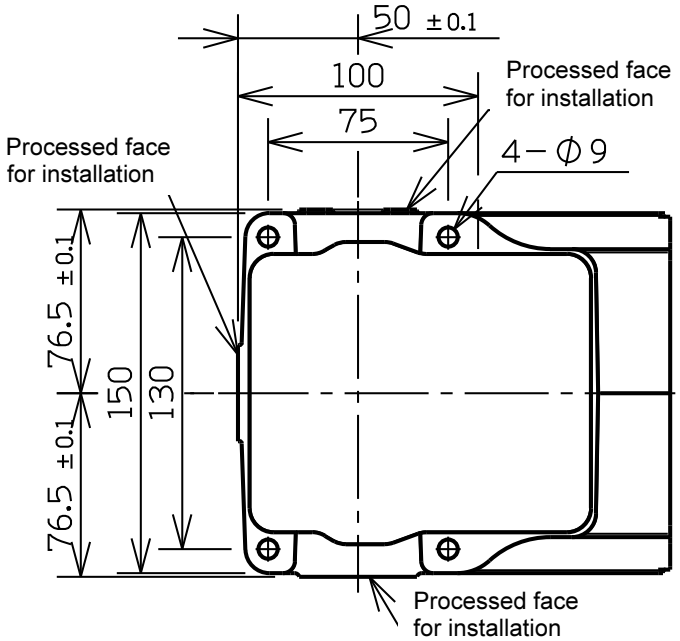

Standard mount
Cable bottom connection

MZ04-01-**B
MZ04D-01-**B
MZ04E-01-**B
MZ04DE-01-**B

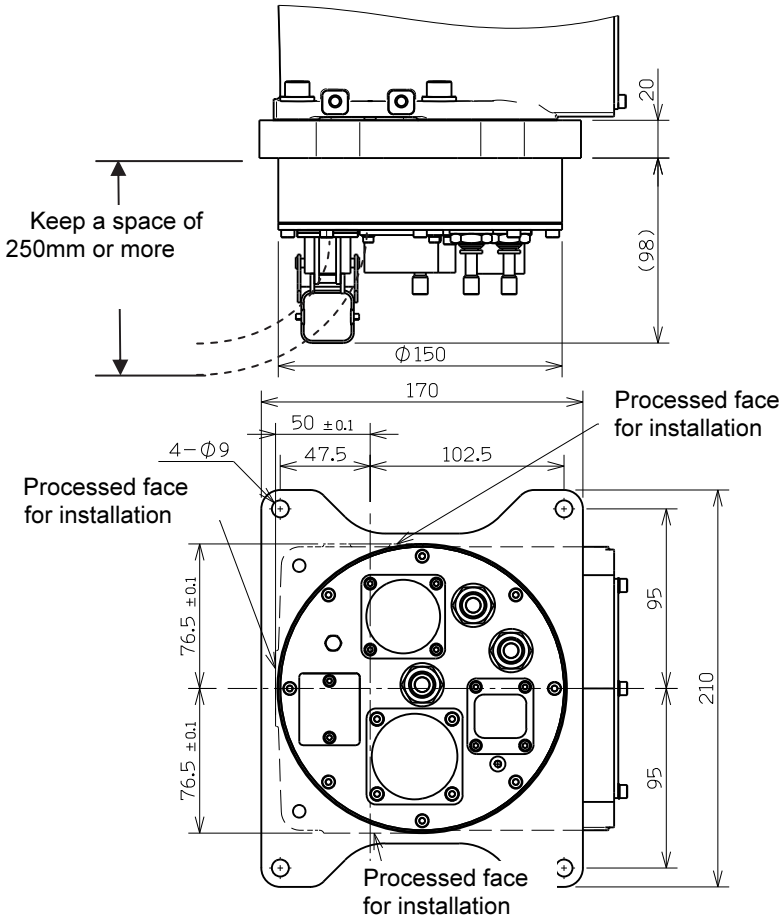

Please consult with each NACHI-FUJIKOSHI office for detail of “Wall mount・Cable rear connection (MZ04--01-*W0)”

■ **Accuracy of installation surface**

When installing robot, strictly observe precautions listed below to cause no deformation in the base.

(1) Make the deviation from the flatness of the 4 plates on the robot installation surface fall within 0.1 mm

(2) Make the deviation in height between the 4 places of each base plate installation surface and the robot installation surface fall in the range of 0.1 mm (±0.05 mm).

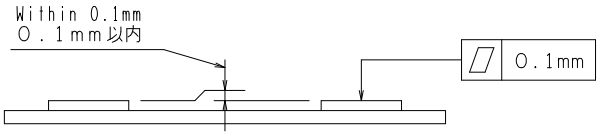

■ **Maximum robot generative force**

Robot model	Maximum Vertical generative force F_V	Maximum horizontal generative force F_H	Maximum Vertical generative moment M_V	Maximum horizontal generative moment M_H
MZ04-01 MZ04D-01 MZ04E-01 MZ04DE-01	1,000N	800N	500Nm	500Nm

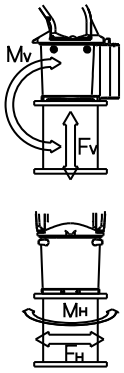

2.4 Allowable wrist load

CAUTION	**A load fixed to the tip of the robot wrist is regulated by the allowable pay load mass, allowable static load torque, and allowable moment of inertia. Strictly keep the wrist load within each allowable value. If wrist load exceeds the allowable value, this robot is out of guarantee.** For detail, please refer to “1.1 List of basic specifications” and following figures.

■ **Torque map for the wrist load**

Use the robot under condition that COG of wrist load falls in the range shown in the torque map.

【MZ04-01】
【MZ04D-01】
【MZ04E-01】
【MZ04DE-01】

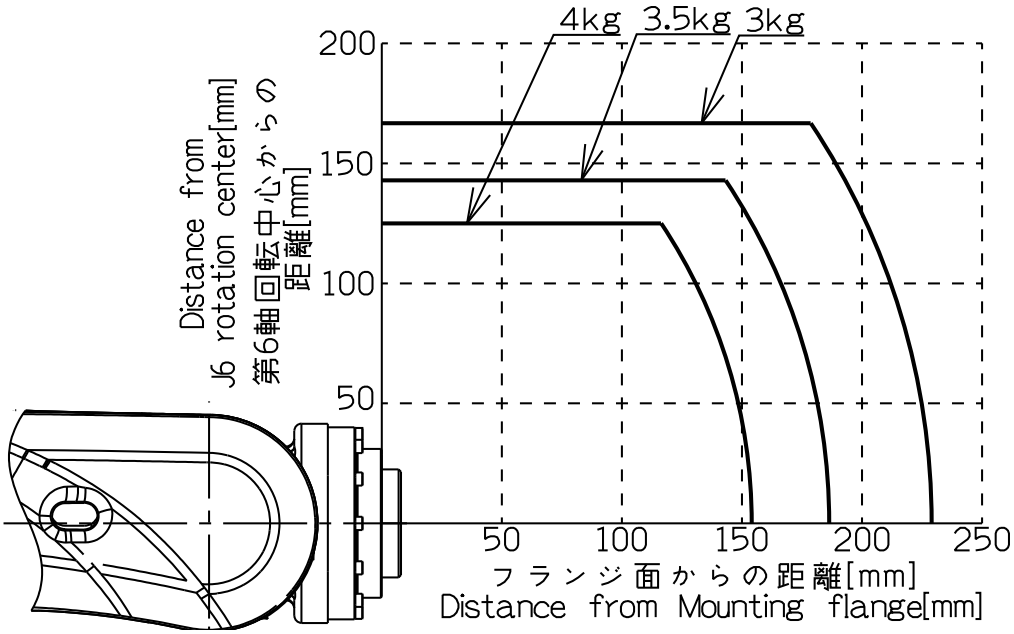

■ **Moment of inertia map for the wrist load**

Use the robot under condition that static load torque and moment of inertia fall in the range shown in the figures below.

【MZ04-01】
【MZ04D-01】
【MZ04E-01】
【MZ04DE-01】

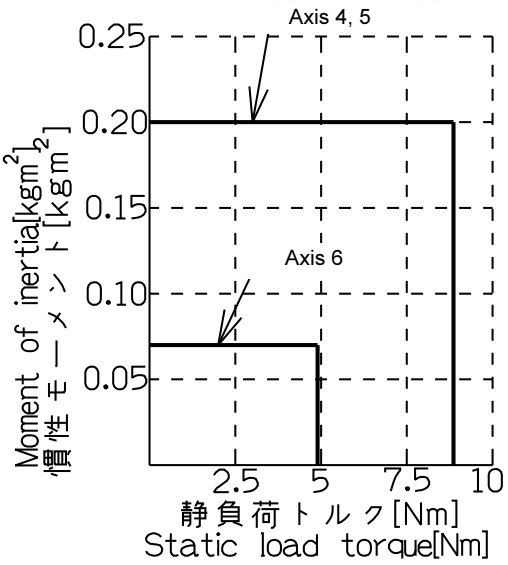

IMPORTANT	If the moment of inertia exceeds the specification, maximum speed is automatically limited by the software to protect the robot.

Chapter 3 Maintenance

WARNING	To perform daily inspection, repair, or part replacement of the robot, be sure to turn OFF the power supply. Furthermore, in order to prevent other workers from improperly turning ON the power supply, post the warning signs such as “DON’T POWER ON”.

3.1 Inspection items and periods

The inspection should be performed in order to maintain the high performance of the robot for an extended period of time. Personnel who are engaged in the inspection should create and implement the inspection program. For inspection items, refer to following table.

Furthermore, perform overhauls **every 20,000 operating hours or every four years, whichever comes earlier**. Should you have any questions about the inspection and adjustment methods, contact our Service Department.

Inspection items and periods

Period			Inspection Item	Inspection Method	Target portion
Daily	Quarterly	Yearly			
○			Robot body	Confirming that playback position is same as before.	Whole body
	○		Cleaning of robot	Wiping of dirt, removing of accumulated spatter, dust, cutting chips.	Whole body
	○		Major bolts	Retightening and coating of paint lock to all of exposed bolts (refer to “Specified tightening torque” table) Also for the tool fixing bolts.	Whole body
		○	Limit switch dogs (option)	Activate and deactivate the limit switch. Retightening and coating of paint lock to the fixing bolts.	Axis 1, 2 and 3
○			Motor	Checking the abnormal heat generation and abnormal sounds	All axis
○			Brake	Confirming that robot arm and tool never drop when motor power is turned ON/OFF.	All axis
		○		Confirming that robot arm and tool never drop when the brake release switch (note) is set to OFF.	All axis
	○		Reduction gear	Confirming of no abnormal vibration, no abnormal sounds and no oil leakage.	All axis
	○		Belt	☞ Refer to “3.2 Maintenance of belt”	
	○		Backlash and play	Confirming of no backlash by pushing the tool in forward/backward, right/left, and upward/downward with hand.	Axis 4, 5 and 6

（Note） Brake release switch is option. When operating this switch to ON, robot arm or operated axis drops. Pay utmost care when operating. Please refer to “3.5 Forcible brake release (option)” for detail.

Specified tightening torque of bolts

	Hexagon socket head cap screw	Hexagon socket head cap SUS screw
M3	1.57 N･m	1.47 N･m
M4	3.63 N･m	3.4 N･m
M5	7.35 N･m	6.9 N･m
M6	12.4 N･m	11.8 N･m
M8	30.4 N･m	28.4 N･m

Tightening torque may vary according to the material and the kind of bolt. Unless specified in drawing, refer to the value in this table.

3.2 Maintenance of belt

3.2.1 Inspection of belt

Tools required (prepared by customer)

Name	Specification	Q'ty
Tension Meter	(Reference) TSUBAKIMOTO CHAIN Type BDTM101	1
Spring measure	can measure force up to approximately 50N (5Kg)	1

STEP	Work performed
1	Turn ON the motor power to get ready for manual operation.
2	Make the robot posture shown below. (If tool is mounted, rotate axis 5 and 6 manually to adjust the belt so that the tension is applied to the belt evenly.)
3	Press the emergency stop button.
4	MZ04-01, MZ04E-01 Remove the covers. (1) Insert driver to the cut hole of cover edge. (2) Move driver to make clearance between robot body and cover. (3) Insert driver to the clearance and make it bigger. Then inner hook is released, cover can be removed easily. 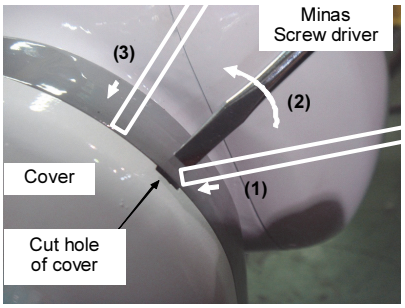 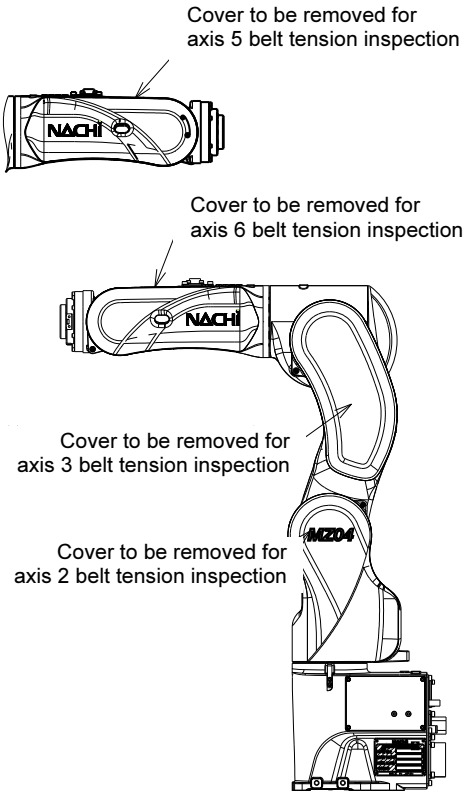 Belt inspection posture and Cover locations
	MZ04D-01, MZ04DE-01 Remove the fixing bolts of the cover and then remove the cover. 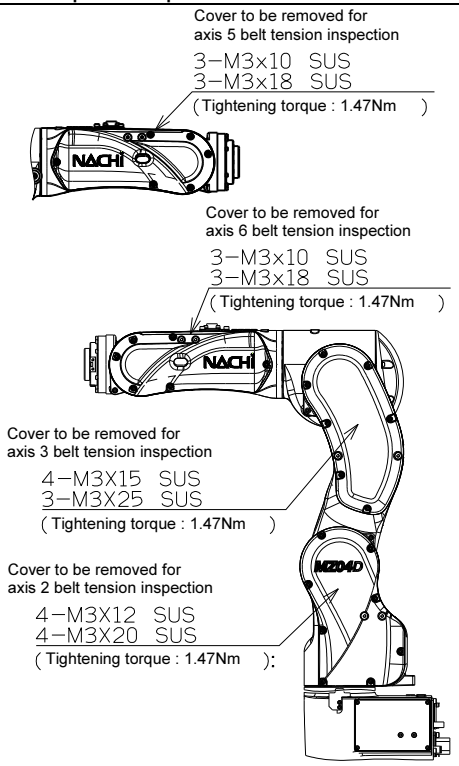

5	While operating the wrist manually, visually check for the belt tooth wear, the belt tooth deddendum cracks, or the belt back cracks. (Refer to ☞ Table of next page) If damaged is found on a belt, replace the belt. (Refer to ☞ "3.2.3 Replacement of belt")
6	Check the belt for looseness using a tension meter. If looseness is found, adjust the belt tension. (Refer to ☞ "3.2.2 Tension adjustment of belt")

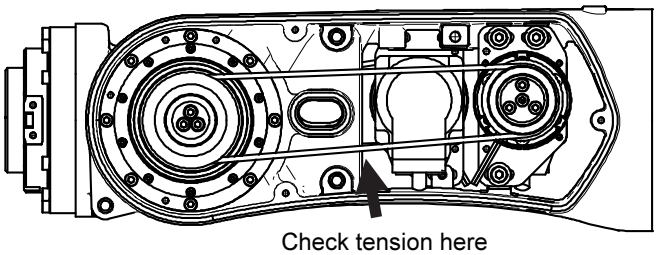

Axis 6

Initial tension	19～25 [N]
SPAN	0.1446 [m]
MASS	0.0088 [kg/m]

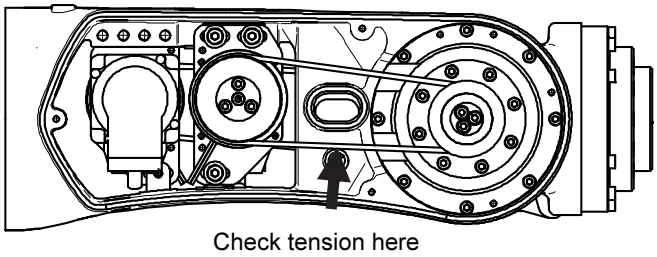

Axis 5

Initial tension	19～25 [N]
SPAN	0.0989 [m]
MASS	0.088 [kg/m]

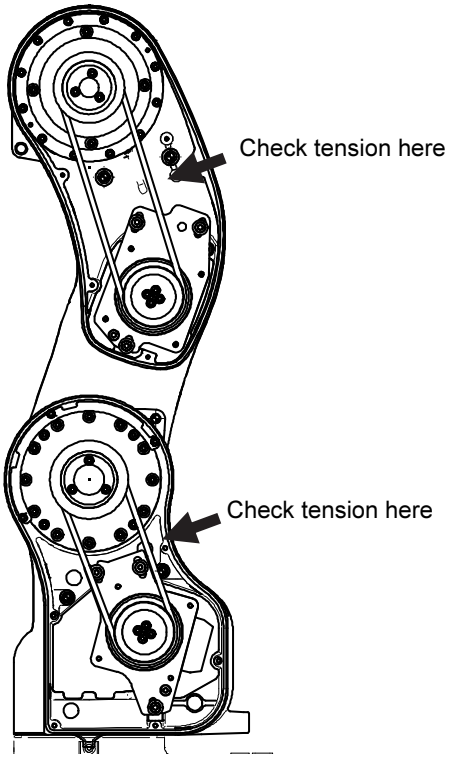

Axis 3

	MZ04-01,MZ04D-01	MZ04E-01,MZ04DE-01
Initial tension	108～122 [N]	29～34 [N]
SPAN	0.145 [m]	0.145 [m]
MASS	0.041 [kg/m]	0.013 [kg/m]

Axis 2

	MZ04-01,MZ04D-01	MZ04E-01,MZ04DE-01
Initial tension	108～122 [N]	29～34 [N]
SPAN	0.1075 [m]	0.1075 [m]
MASS	0.041 [kg/m]	0.013 [kg/m]

Inspection of belt

Type of abnormalities	External appearance
Abnormal wear of tooth (Early stage)	If the tooth doth is worn, replace the belt. In such a case, the fiber of the tooth doth is become fluffy, and the rubber is removed. Consequently, the belt bleaches, and the texture of the tooth dose becomes ambiguous. 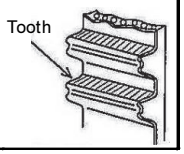

Check the appearance of the belt, and if any of the abnormalities as follows is observed, replace the belt.

Type of abnormalities	External appearance
Abnormal wear of tooth	The tooth cloth is worn out, and the rubber is exposed. (The face width becomes thinner.) 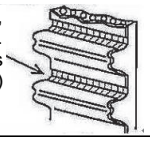
The bottom of tooth is cracked.	Crack 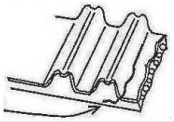
Tooth is missing.	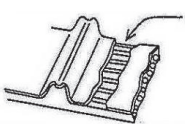
Abnormal wear	The corner is rounded. Note: The side is normal if its edge remains sharp, as if it was cut with a knife. Abnormal wear (The core wire has frayed.)
Belt side is tore.	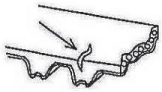

3.2.2 Tension adjustment of belt

Tools required (prepared by customer)

Name	Specification	Q'ty
Spring gauge	can measure up to approx. 50N (5kg)	1
Tension adjustment bolt	M3, 30mm or longer (for axis 5,6)	1
Tension adjustment bolt	M4, 30mm or longer (for axis 5,6)	1

No.	Contents of operation	Points
1	Loosen the plate fixing bolt (3). Never remove it.	
2	Attach the tension adjustment bolt at the tap hole on plate.	Size of tension adjustment bolt differs due to axis.
3	Hook the spring gauge to the tension adjustment bolt. Then pull it to the direction written by arrow in figure.	
4	Adjust the tension to the designated value and keep it. Tighten the plate fixing bolt (3) by specified torque.	
5	Remove the tension adjustment bolt.	

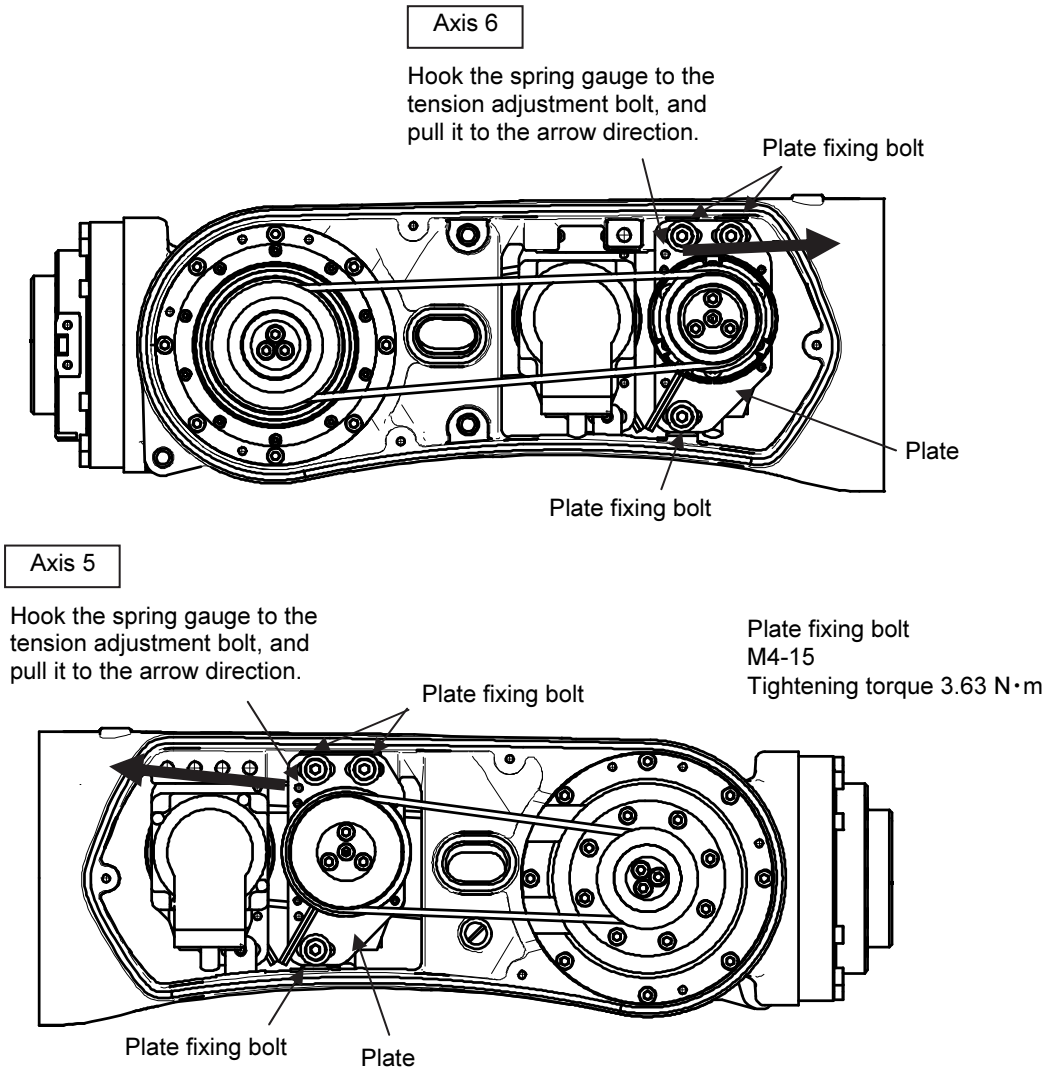

Tension adjustment of best (axis 5 and 6)

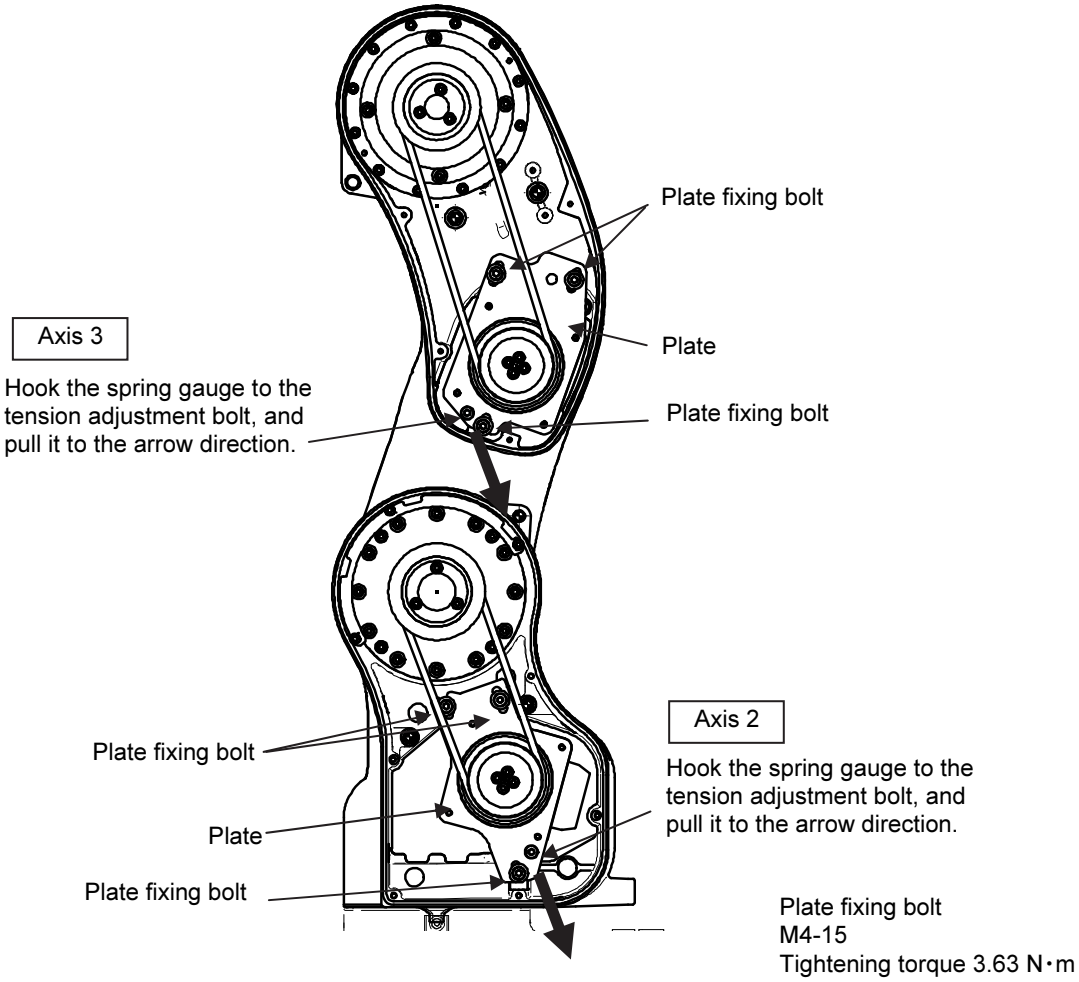

Tension adjustment of best (axis 2 and 3)

3.2.3 Replacement of belt

WARNING	Never forget to **hold robot arm or wrist/tool** in advance. If belt is dismounted without supporting them, forearm will fall down or will jump up in case of axis 2, forearm will fall down in case of axis 3, wrist and tool will fall down or will rotate quickly in case of wrist axes, possibly resulting in serious injury.

No.	Contents of operation	Points
1	Turn ON the motor power to get ready for manual operation.	
2	Lower or raise the wrist axis to a position where belt can be replaced easily.	If tool is mounted, rotate axis 5 and 6 manually to adjust the belt so that the tension is applied to the belt evenly.
3	Turn OFF the power supply of controller.	
4	Hold robot arm or wrist/tool.	
5	Remove the cover of the wrist, which is to have its belt replaced.	
6	Loosen the pulley locking bolts.	
7	Remove the belt from the two pulleys.	
8	Attach a new belt to the two pulleys.	
9	Adjust the belt tension. (Refer to ☞ “3.2.2 Tension adjustment of belt”)	
10	Mount the wrist cover.	
11	Release robot arm or wrist/tool. Then turn ON the power supply of controller.	
12	Perform the encoder correction. (☞ Refer to “3.2.5 Encoder correction”)	
13	Check the robot has no problem with the movement.	

3.2.4 Encoder reset

This procedure is clearing the internal memory in encoder itself.
This procedure is absolutely necessary for the recovery when robot is replaced, when encoder connector is disconnected, when encoder batteries are disconnected while controller power OFF, and when encoder error has been occurred. This procedure is unnecessary for other case. For example, this is unnecessary after replacing the belt.

No special tools are required for encoder reset procedure.
In case of Compact TP of CFD controller
Refer to CFD controller instruction manual “Start Up” “2.1 Set Up of Robot”
In case of Smart TP of CFD controller
Refer to FD controller instruction manual “SETUP” “4.3.3 Encoder reset and Encoder correction”

After this procedure, please proceed with “encoder correction” procedure without fail.

3.2.5 Encoder correction

This is very important procedure to define the zero position of robot axis
This procedure is registering the “encoder correction data” so that encoder data becomes the “pre-determined value” at the “pre-determined position”. This position is called **reference position**. Zeroing pin and blocks are used to make this posture.

IMPORTANT	Reference position and its encoder data are explained in following figures. These encoder data are very important to check the successful procedure of encoder correction.

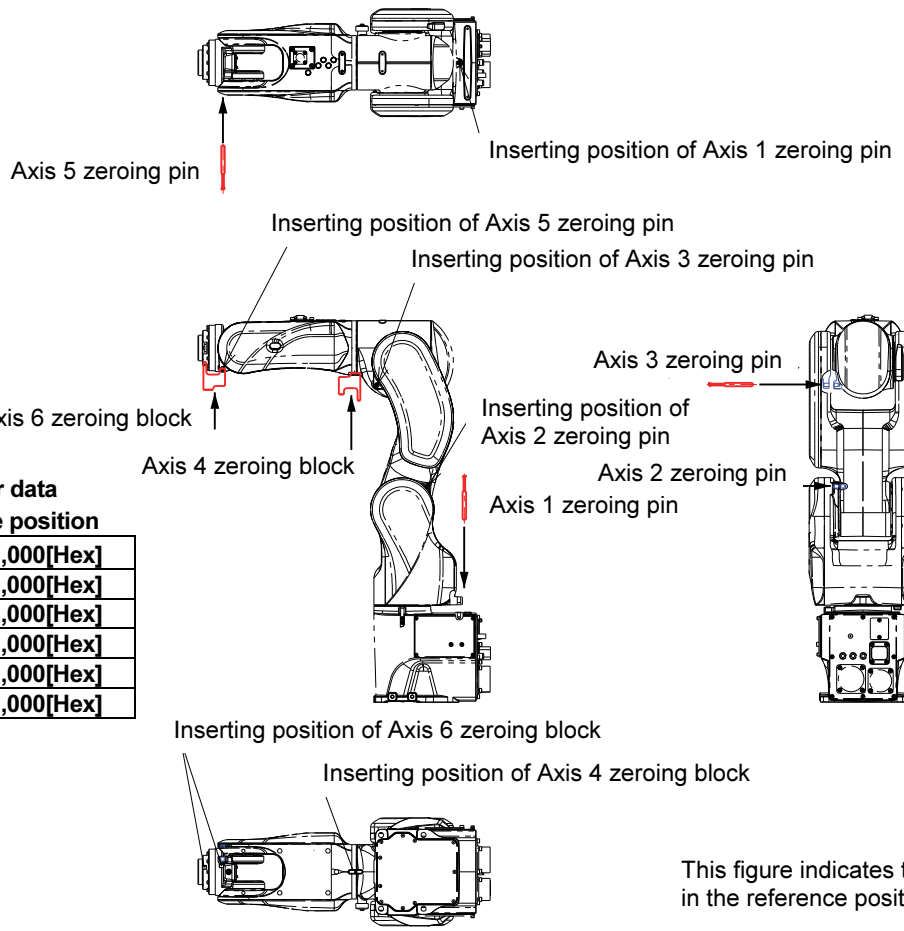

Encoder data
At reference position

Axis 1	**80,000[Hex]**
Axis 2	**80,000[Hex]**
Axis 3	**80,000[Hex]**
Axis 4	**80,000[Hex]**
Axis 5	**80,000[Hex]**
Axis 6	**80,000[Hex]**

This figure indicates that all axis in the reference position.

Reference position (Locations to insert zeroing pin and block)

CAUTION	This work includes some jobs that should be conducted with motors ON. Consequently, be sure to conduct the work at least by a pair of two persons. One person must stay on guard to press an Emergency Stop button at any time, while the other person must promptly finish the work with thorough attention paid to the robot operating area. Furthermore, prior to starting the work, check for safe corridors.

No	Contents of operation
1	For this procedure, following tools are required. zeroing pin and block (OP-T2-*** ; option) Please prepare these tools by referring to ”Chapter 4 Recommended spare parts and special tools for maintenance”.
2	Move the robot (target axis) to the reference position in manual operation (speed 2 or 3) For axis 1, 2, 3 and 5: The zeroing pin is inserted at the reference position. For axis 4 and 6: The zeroing block is mounted at the reference position.
3	Register the encoder correction data <u>In case of Compact TP of CFD controller</u> ☞ Refer to CFD controller instruction manual “Start Up” “2.1 Set Up of Robot” <u>In case of Smart TP of CFD controller</u> ☞ Refer to FD controller instruction manual “SETUP” “4.3.3 Encoder reset and Encoder correction”
4	Confirm that current position data is coincident with “Encoder data of reference position”.
5	Remove the zeroing pin (and block). Ensure that the robot operation presents no problem.

INFO.	When robot body is replaced, it’s possible that software stroke error occurs and robot can not arrive in the reference position. Because software is checking the working envelop although the position data is not correct. In this case, once register the encoder correction data in that (incorrect) position. After that, turn the motor power on again and move the robot to the correct reference position. (now working envelop is already refreshed.) Finally register the encoder correction data again.
CAUTION	**Axis interference of wrist axis** “Axis interference” exists due to the structure of the wrist on this robot. Because axis 5 interferes to axis 6, axis 5 must be in reference position when performing axis 6 encoder correction. Otherwise zero position is not be set correctly so robot will not move properly.
CAUTION	**Caution of axis 4** Axis 4 has no mechanical limit, so it is possible to mistake 360 degree to define reference position. If wrong position is defined as reference position, internal wires may be broken. Please do not forge to check the operating direction to set axis 4 to the reference position before starting encoder correction procedure. If unfortunately the direction is not clear, remove the gear box cover and check the internal wires of axis 4. Operate the axis 4 to the direction so that axis 4 wires are not twisted.

3.3 Battery replacement

The robot uses lithium batteries for the backup of encoder data.
If the battery voltage drops below the given limit, the data will not be kept normal.

IMPORTANT	Replace batteries **every 8 years**, under the condition that operation time length is 8h/day and shut down the power 16h/day.
IMPORTANT	The replacement period varies with use environments (mainly temperatures). If the battery voltage drops below the given limit, an error indicating the voltage drop will be displayed on the controller. In this case, replace the battery.
IMPORTANT	Replace the battery with the power supply of the controller turned ON. Replacing the battery with the power supply turned OFF can result in the encoder data error, thus requiring the resetting of the encoder..
IMPORTANT	Do not store the batteries in places with high temperature and high humidity. Store them in well-ventilated places to avoid dew condensation. It is recommended to store the batteries in places with less temperature changes at ambient temperatures (20±15°C) and relative humidity of not more than 70%.
IMPORTANT	Discarding lithium batteries according to your local trash separation rule When discarding used lithium batteries, insulate the electrical terminals. And then follow the respective trash separation rules in your local district and discard them separately as ***"Used lithium batteries"***. 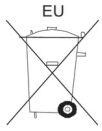

Tools required M4 torque wrench, Double-sided adhesive tape, Nipper, Cable tie

No.	Contents of operation
1	Turn ON the power supply of the controller.
2	Press the emergency stop button.
3	Remove the fixing bolts of BJ1 panel. 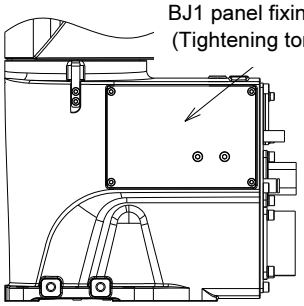
4	Pull out the battery unit from BJ1 box.
5	Disconnect the connectors CNBAT12, CNBAT34 and CNBAT5 from the battery. An error (encoder battery voltage drop) occurs, but this is not an operational issue.
6	Dismount cable tie and remove the battery unit from the case. 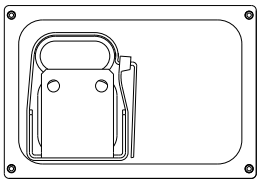 The orange cable tie is reusable, so do not cut it. 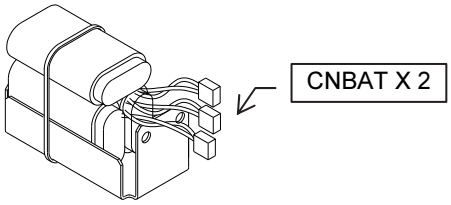
7	Mount the new battery unit using cable tie on the case.
8	Connect the connectors to the new battery.
9	Reinstall BJ1 panel and fix it with fixing bolt.

3.4 Robot body replacement

If some trouble happened and it is considered that its cause is robot itself, please replace robot.

CAUTION	This work includes some jobs that should be conducted with motors ON. Consequently, be sure to conduct the work at least by a pair of two persons. One person must stay on guard to press an Emergency Stop button at any time, while the other person must promptly finish the work with thorough attention paid to the robot operating area. Furthermore, prior to starting the work, check for safe corridors.
CAUTION	When operating the brake release switch, operated axis is free to move by the gravity force. So robot arm must be supported without fail before the brake release switch is operated.

Move robot to safe posture for transporting	1	Turn motor power on and operate the robot by manual operation to safe posture for transporting. (☞ "2.2 Transport procedure") If it's impossible because of error, move the robot arm by hand with the brake release switch (option). (Refer to ☞ instruction "3.5 Forcible brake release (option)" for the switch operation.)
	2	Push emergency stop button and turn controller power off.
Disconnect electric cable and air source, also dismount tool	3	Stop the air supply to the robot. Disconnect all electric cable and air tube such as wires from robot controller and air source. Dismount the tool. (Make a mark on it in order to mount the tool easily after installation.)
Remove robot	4	Use a crane. Mount the transporting bracket (☞ "2.2 Transport procedure"), hook the wire and stretch it lightly, unfasten all of installation bolts (☞ "2.3 Installation procedure"), at last hang up the robot body.
Install new robot	5	Install the new robot.(☞ "2.3 Installation procedure")
	6	Connect all electric cable and air tube. Mount the tool. Supply the air to the robot.
Adjust reference position	7	Turn the controller power on.
	8	**"Reference position adjustment" needs to be performed for all axes.** At first perform encoder reset procedure (☞ "3.2.4 Encoder reset"). Then perform encoder correction procedure (☞ "3.2.5 Encoder correction").
Conform robot behavior	9	In teach mode, confirm that all axis can move correctly by manual operation. Also confirm that TCP fixing movement is correct by robot coordinate operation. If TCP fixing movement is not correct, check whether tool mounting position is same as that of previous robot. If it is correct, tool length parameter needs to be set correctly by "tool length automatic setting".
	10	In teach mode, conform that robot program can be operated same as it was by check go and back operation. If robot position differs a little because of the installation position error and the reference position adjustment error, try to change the position of teaching program.

3.5 Forcible brake release (option)

Brake release switch (option) can be used to release the brake in one motor. This is useful for the situation such as that motor power cannot be turned ON because of servo error, or operator is pinched by robot arm.

Please operate this switch by following to the procedure written below.

DANGER	When releasing a brake, the robot arm may fall down or move fast towards unexpected direction. Therefore, this releasing operation must be performed after confirming the axis number to be released and fixing the robot arm securely via cranes etc. Death or serious injury may result if you make contact with the robot arm or are squeezed between the robot arm and another part. In case of an axis that falls down because of the gravity, please release the brake after taking steps to hold or support the robot arm and any other parts. The longer the brake release switch is pressed, the larger the shock of falling down may get. Therefore, the pressing time should be short.

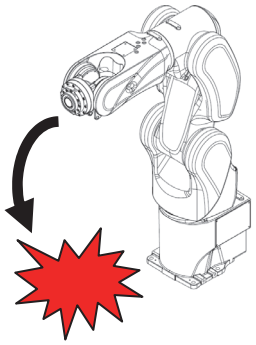

No.	Contents of operation
1	Turn OFF the power of this controller.
2	Remove the jumper plug CNSW that is in the BRAKE RELEASE connector on the back side panel and insert the CNSW of this option's cable instead. (Please keep the jumper plug until finishing this brake releasing operation because this plug is necessary)
3	Check that RELEASE plug is in the CNMOD connector.
4	Pull out an axis selection connector from the CNSEL bottom side and then insert it to the desired position (axis number).
5	Turn ON the power of this controller.
6	Only while pressing the SW1, the brake of the selected axis number will be released. (At this time, the robot arm may fall down or move fast. Please do not forget to take a preventive measure before pressing the SW1.)
7	After finishing the brake release operation, insert the connectors to their original positions. Do not forget to put the jumper plug CNSW to the BRAKE RELEASE on the backside of this controller again.

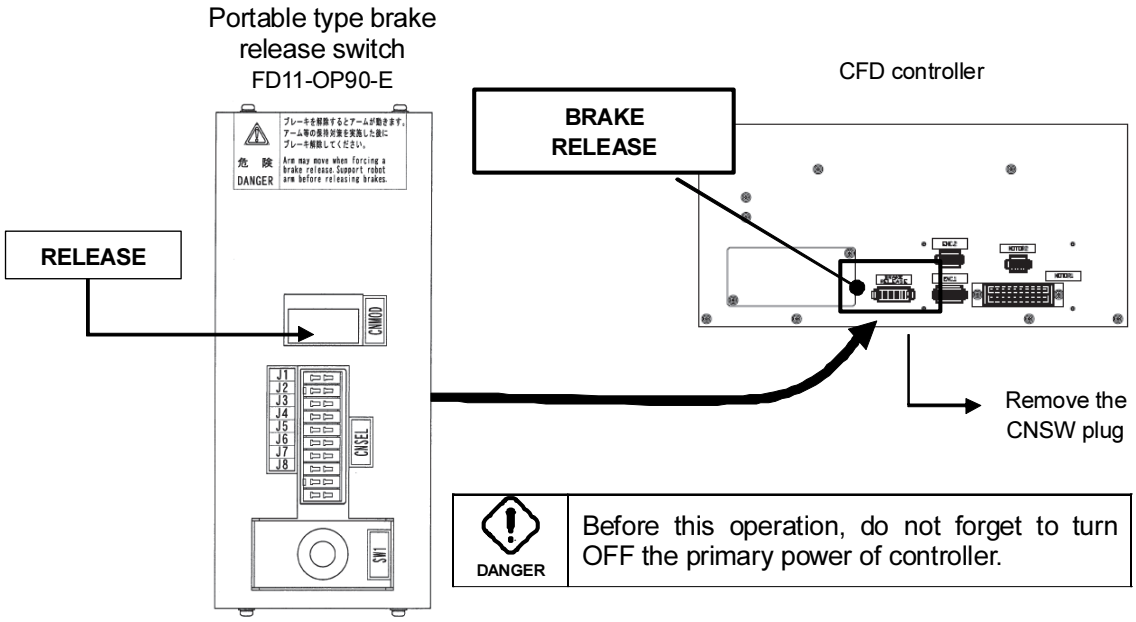

Chapter 4 Recommended spare parts and special tools for maintenance

Recommended spare parts are listed in Table shown as below. Please check your robot serial no. and manufacturing date if you purchase spare parts. Consult NACHI service center for help if necessary.

Classification A: Periodical maintenance parts, B: Spare parts

Recommended spare parts

Classification	Name	Part No. (Model)	In use/unit	Recommended/unit	Robot model	Remarks
					MZ04-01, MZ04E-01, MZ04D-01, MZ04DE-01	
A	BATTERY	ER17/50H	2	2	○	(*1)
A	BATTERY UNIT	KP-ZA-016	1	1	○	2pcs of battery (*2)
B	ULTRA PX BELT	BG350UP5M10-HC	1	1	○	Axis 2
B	ULTRA PX BELT	BG420UP5M10-HC	1	1	○	Axis 3
B	ULTRA PX BELT	BG303UP3M4-HC	1	1	○	Axis 5
B	ULTRA PX BELT	BG393UP3M4-HC	1	1	○	Axis 6

(*1) In case of purchasing this in China, please order ER18505-2. This is compatible with ER17/50H.
(*2) In case of purchasing this in China, please order KP-ZA-016CN. This is compatible with KP-ZA-016. When replacing all batteries in robot, please order battery unit which consists of all needed batteries.

The fixtures listed below are required fixture for maintenance work or for efficient work. Please check your robot serial no. and manufacturing date if you purchase these tools. Consult NACHI service center for help if necessary.

Special tools for maintenance (option)

Name	Part No. (Model)	Robot model	Remarks
		MZ04-01, MZ04E-01, MZ04D-01, MZ04DE-01	
ACCESSORY	OP-T2-089	○	Zeroing pin & zeroing block

Contents of OP-T2-089 (Zeroing pin & zeroing block) (option)

Applied Robot model	Name	Marking	Appearance, etc
MZ04-01 MZ04D-01 MZ04E-01 MZ04DE-01	Axis 1,2,3, 5 Zeroing pin		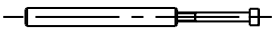
	Axis 4,6 Zeroing block	MZ04	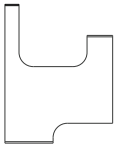

NOTE

Chapter 5 Wire-harness connection diagram

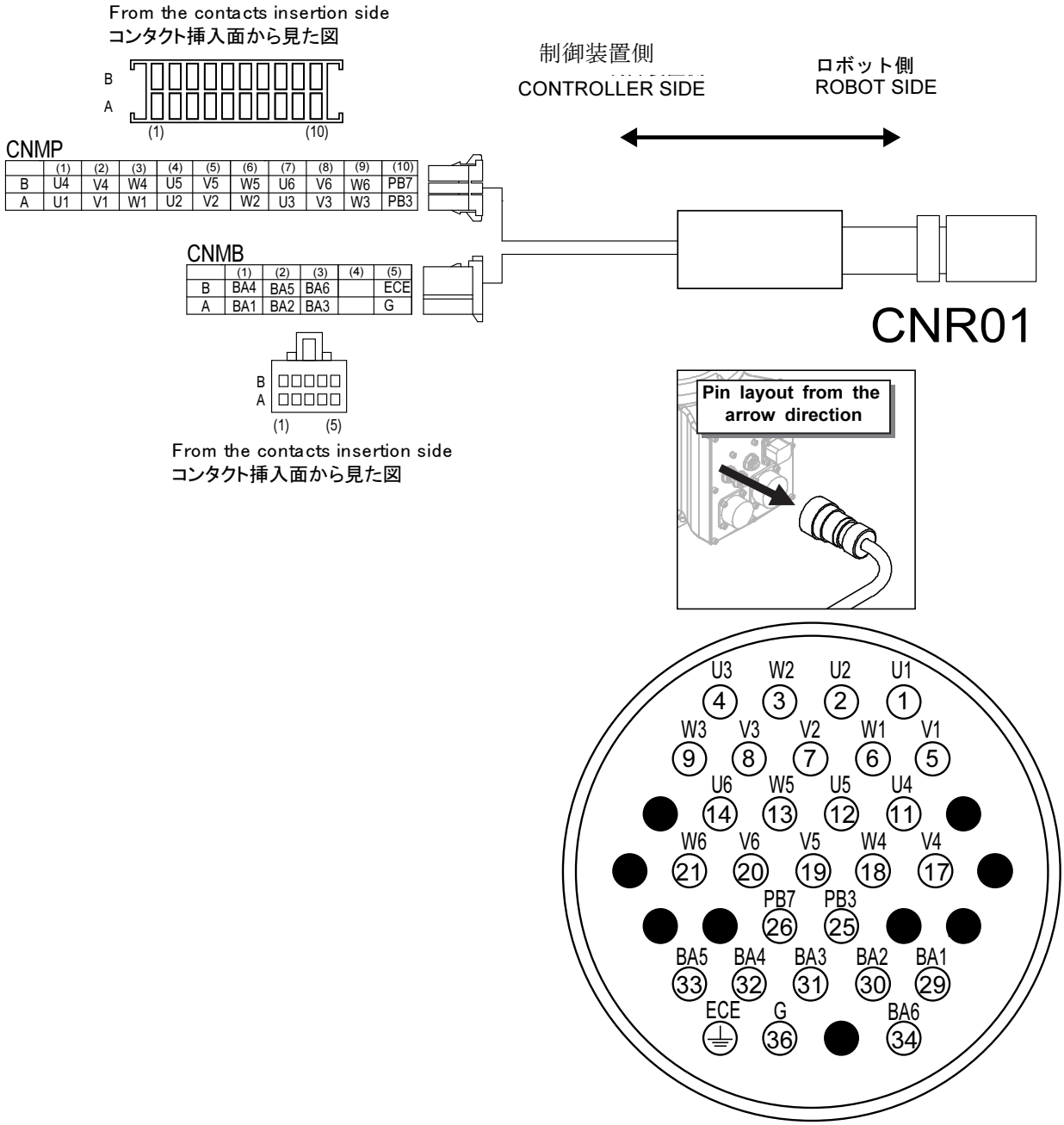

CFD CONTROLLER Wire-harness connection (1) CNR01

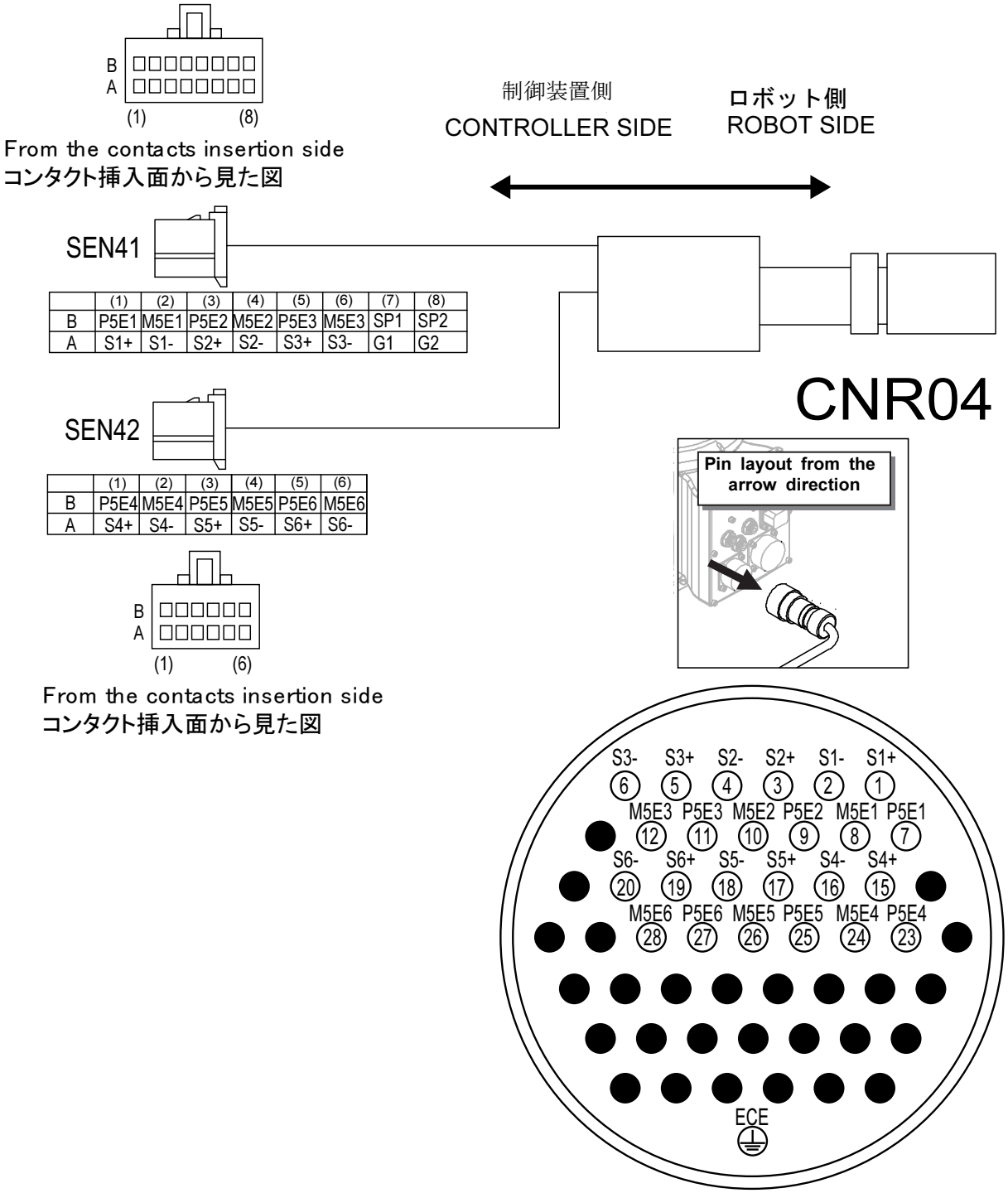

	(1)	(2)	(3)	(4)	(5)	(6)	(7)	(8)
B	P5E1	M5E1	P5E2	M5E2	P5E3	M5E3	SP1	SP2
A	S1+	S1-	S2+	S2-	S3+	S3-	G1	G2

	(1)	(2)	(3)	(4)	(5)	(6)
B	P5E4	M5E4	P5E5	M5E5	P5E6	M5E6
A	S4+	S4-	S5+	S5-	S6+	S6-

CFD CONTROLLER Wire-harness connection (2) CNR04

NACHI NACHI-FUJIKOSHI CORP.			http://www.nachi-fujikoshi.co.jp/
Japan Main Office	Phone: +81-3-5568-5245	Fax: +81-3-5568-5236	Shiodome Sumitomo Bldg. 17F, 1-9-2 Higashi-Shinbashi Minato-ku, TOKYO, 105-0021 JAPAN
Nachi Robotic Systems Inc. (NRS)			***http://www.nachirobotics.com/***
North America Headquarters	Phone: 248-305-6545	Fax: 248-305-6542	42775 W. 9 Mile Rd. Novi, Michigan 48375, U.S.A
Indiana Service Center	Phone: 248-305-6545	Fax: 248-305-6542	Greenwood, Indiana
Ohio Service Center	Phone: 248-305-6545	Fax: 248-305-6542	Cincinnati, Ohio
South Carolina Service Center	Phone: 248-305-6545	Fax: 248-305-6542	Greenville, South Carolina
Canada Branch Office	Phone: 905-760-9542	Fax: 905-760-9477	89 Courtland Ave., Unit No.2, Concord, Ontario, L4K 3T4, CANADA
Mexico Branch Office	Phone :+52-555312-6556	Fax:+52-55-5312-7248	Urbina No.54, Parque Industrial Naucalpan, Naucalpan de Juarez, Estado de Mexico C.P. 53489, MEXICO
NACHI EUROPE GmbH			***http://www.nachi.de/***
Central Office Germany	Phone: +49-2151-65046-0	Fax: +49-2151-65046-90	Bischofstrasse 99, 47809, Krefeld, GERMANY
U.K. branch	Phone: +44-0121-423-5000	Fax: +44-0121-421-7520	Unit 3, 92, Kettles Wood Drive, Woodgate Business Park, Birmingham B32 3DB, U.K.
Czech branch	Phone: + 420-255-734-000	Fax: +420-255-734-001	Obchodni 132, 251 01 Cestlice, PRAGUE-EAST CZECH REPUBLIC
NACHI AUSTRALIA PTY. LTD.			***http://www.nachi.com.au/***
Robotic Division & Victoria office	Phone: +61-(0)3-9796-4144	Fax: +61-(0)3-9796-3899	38, Melverton Drive, Hallam, Victoria 3803, , AUSTRALIA
Sydney office	Phone: +61-(0)2-9898-1511	Fax: +61-(0)2-9898-1678	Unit 1, 23-29 South Street, Rydalmere, N.S.W, 2116, AUSTRALIA
Brisbane office	Phone: +61-(0)7-3272-4714	Fax: +61-(0)7-3272-5324	7/96 Gardens Dr,Willawong,QLD 4110, , AUSTRALIA
NACHI SHANGHAI CO., LTD.			***http://www.nachi.com.cn/***
Shanghai office	Phone: +86-(0)21-6915-2200	Fax: +86-(0)21-6915-2200	11F Royal Wealth Centre, No.7 Lane 98 Danba Road Putuo District, Shanghai 200062, China
NACHI KOREA			***http://www.nachi-korea.co.kr/***
Seoul office	Phone: +82-(0)2-469-2254	Fax: +82-(0)2-469-2264	2F Dongsan Bldg. 276-4, Sungsu 2GA-3DONG, Sungdong-ku, Seoul 133-123, KOREA

Copyright NACHI-FUJIKOSHI CORP.

Robot Division

1-1-1, FUJIKOSHIHONMACHI, TOYAMA CITY, JAPAN 930-8511
Phone +81-76-423-5137
Fax +81-76-493-5252

NACHI-FUJIKOSHI CORP. holds all rights of this document. No part of this manual may be photocopied or reproduced in any from without prior written consent from NACHI-FUJIKOSHI CORP. Contents of this document may be modified without notice. Any missing page or erratic pagination in this document will be replaced.

In case that an end user uses this product for military purpose or production of weapon, this product may be liable for the subject of export restriction stipulated in the Foreign Exchange and Foreign Trade Control Law. Please go through careful investigation and necessary formalities for export.

Original manual is written in Japanese.

NACHI-FUJIKOSHI CORP. ©