A Simplex-Inspired Architecture for Integrating Quantum Capabilities into Cyber-Physical Systems

Tamim Ahmed, Dacheng Shen, Mengyu Liu, and Monowar Hasan
School of Electrical Engineering and Computer Science, Washington State University, USA

WASHINGTON STATE UNIVERSITY

Context

- Classical method, Gaussian Process Regression, provides accurate and uncertainty-aware models but faces scalability limits due to high computational complexity.
- Quantum-assisted algorithms improve efficiency, yet they are in the **NISQ** era and remain unreliable for safety-critical CPS due to noise and instability.
- We need a framework that can combine the performance of a quantum system and reliability of a classical system to enable safe and efficient system operation.
- Existing approaches lack a principled mechanism to dynamically balance performance and safety under real-time, safety-critical conditions.

Our Research: *Runtime-Assured Quantum–Classical Integration for Safety-Critical CPS*

We develop a *Simplex-inspired* hybrid identification framework that couples *Quantum-assisted GPR* with *classical GPR* under *runtime switching* to ensure *safety-critical operation* in CPS.

Outcome: We established a safety-aware runtime framework that can dynamically balance computational efficiency and predictive reliability through principled switching between quantum-assisted and classical models under safety constraints.

Simplex-Based Hybrid Workflow

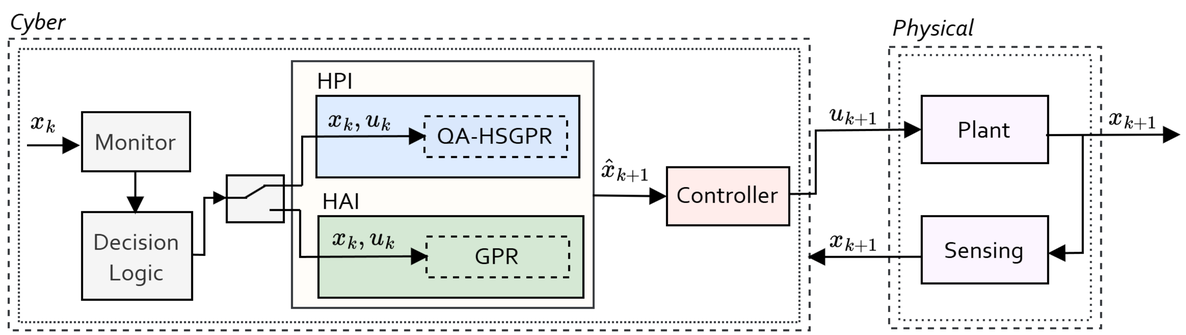

Runtime Switching Algorithm

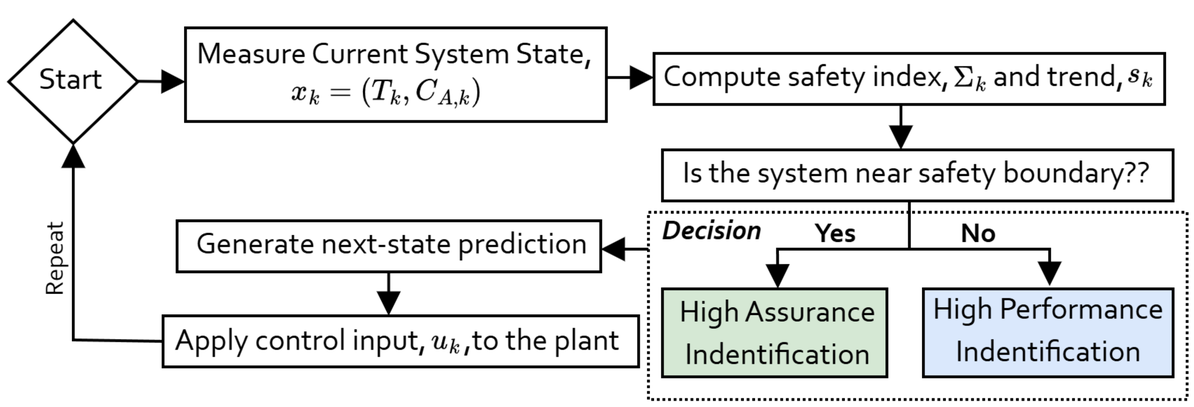

Plant Model– Continuous Stirred-Tank Reactor (CSTR)

- We evaluate our framework on CSTR which is a standard nonlinear CPS benchmark plant.
- The system dynamics are governed by reactant concentration (C_k) and temperature (T_k), and it is controlled via a cooling mechanism.
- Nonlinear reaction kinetics can amplify small temperature variations, leading to rapid system escalation and requiring safety-critical control.

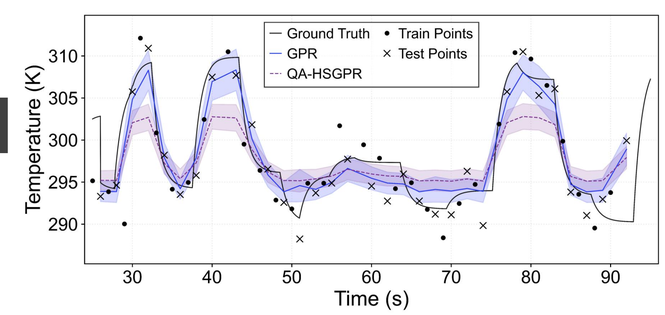

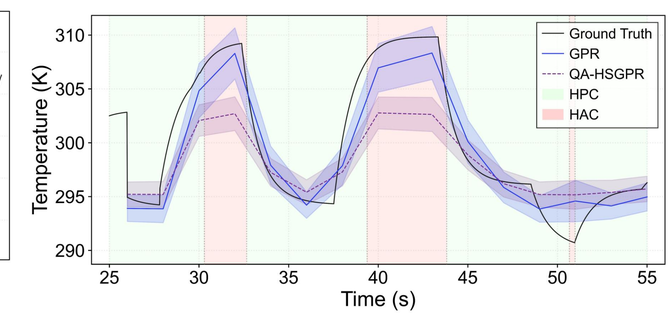

Classical GPR closely tracks ground truth, while Quantum-assisted GPR captures trends with lower accuracy because of reduce rank approximation.

The framework switches between quantum (HPI) and classical (HAI) models based on safety conditions (i.e., system stability).

Switching ensures efficiency in safe regions and reliability near critical states

Want to learn more about our research? Contact us:

tamim.ahmed@wsu.edu
dacheng.shen@wsu.edu
monowar.hasan@wsu.edu
mengyu.liu@wsu.edu

Collaboration Between
WSU Pullman | WSU Tri-cities