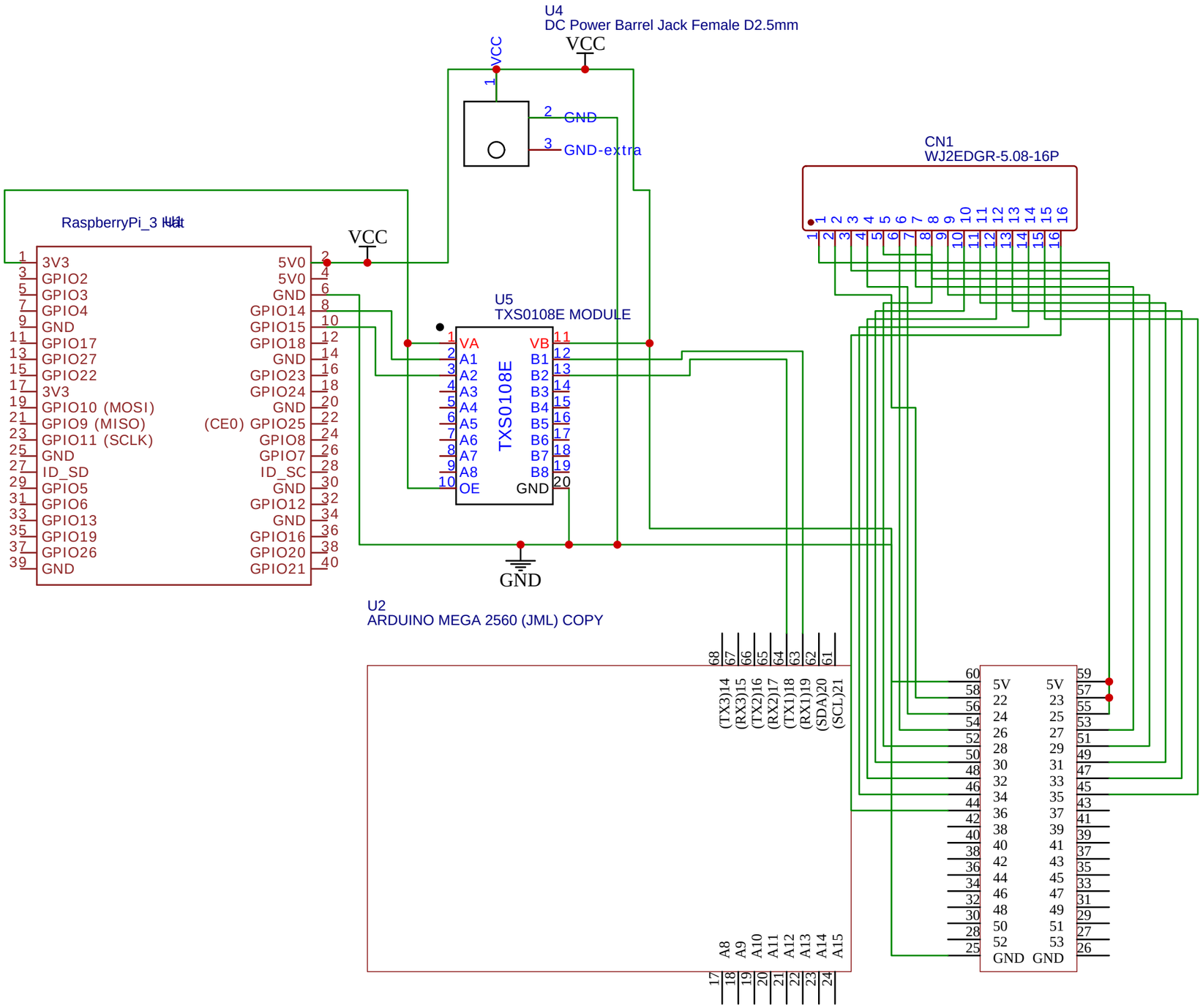

TITLE: Control Module Board	REV: 1.0
Company: AstrOS	Sheet: 1/1
Date: 2024-10-14 Drawn By: Jason Deatrick	