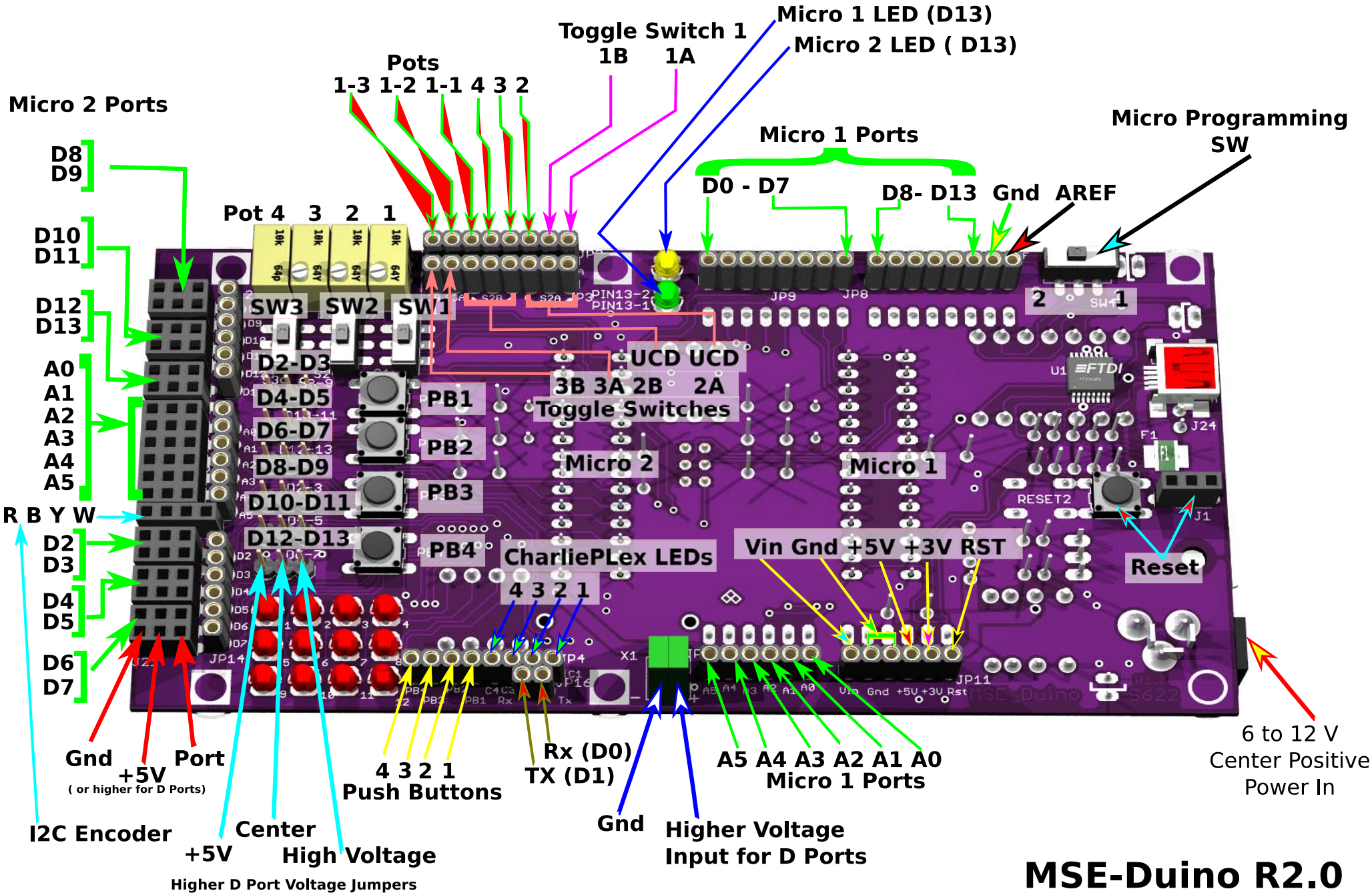
Micro 2 Ports
D8
D9
D10
D11
D12
D13
A0
A1
A2
A3
A4
A5
R B Y W
D2
D3
D4
D5
D6
D7
Pots
1-3 1-2 1-1 4 3 2
Toggle Switch 1
1B 1A
Micro 1 LED (D13)
Micro 2 LED (D13)
Micro 1 Ports
D0 - D7
D8- D13 Gnd AREF
Micro Programming
SW
Pot 4 3 2 1
SW3 SW2 SW1
D2-D3
D4-D5
D6-D7
D8-D9
D10-D11
D12-D13
PB1
PB2
PB3
PB4
UCD UCD
3B 3A 2B 2A
Toggle Switches
Micro 2
Micro 1
CharliePLex LEDs
4 3 2 1
Vin Gnd +5V +3V RST
Reset
Gnd
+5V
Port
(or higher for D Ports)
I2C Encoder
+5V
Center
High Voltage
Higher D Port Voltage Jumpers
4 3 2 1
Push Buttons
Rx (D0)
TX (D1)
Gnd
Higher Voltage
Input for D Ports
A5 A4 A3 A2 A1 A0
Micro 1 Ports
6 to 12 V
Center Positive
Power In
MSE-Duino R2.0
MSE 2202B