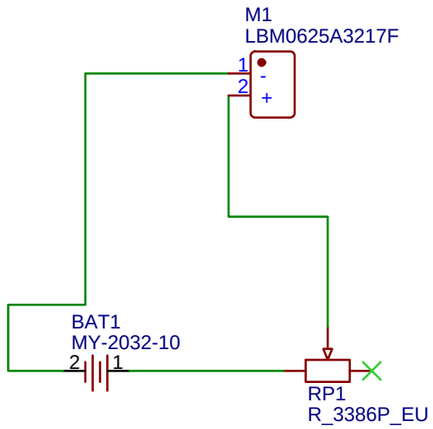

TITLE: Sheet_1		REV: 1.0
	Company: Your Company	Sheet: 1/1
	Date: 2024-10-11 Drawn By: topotamadre1811	