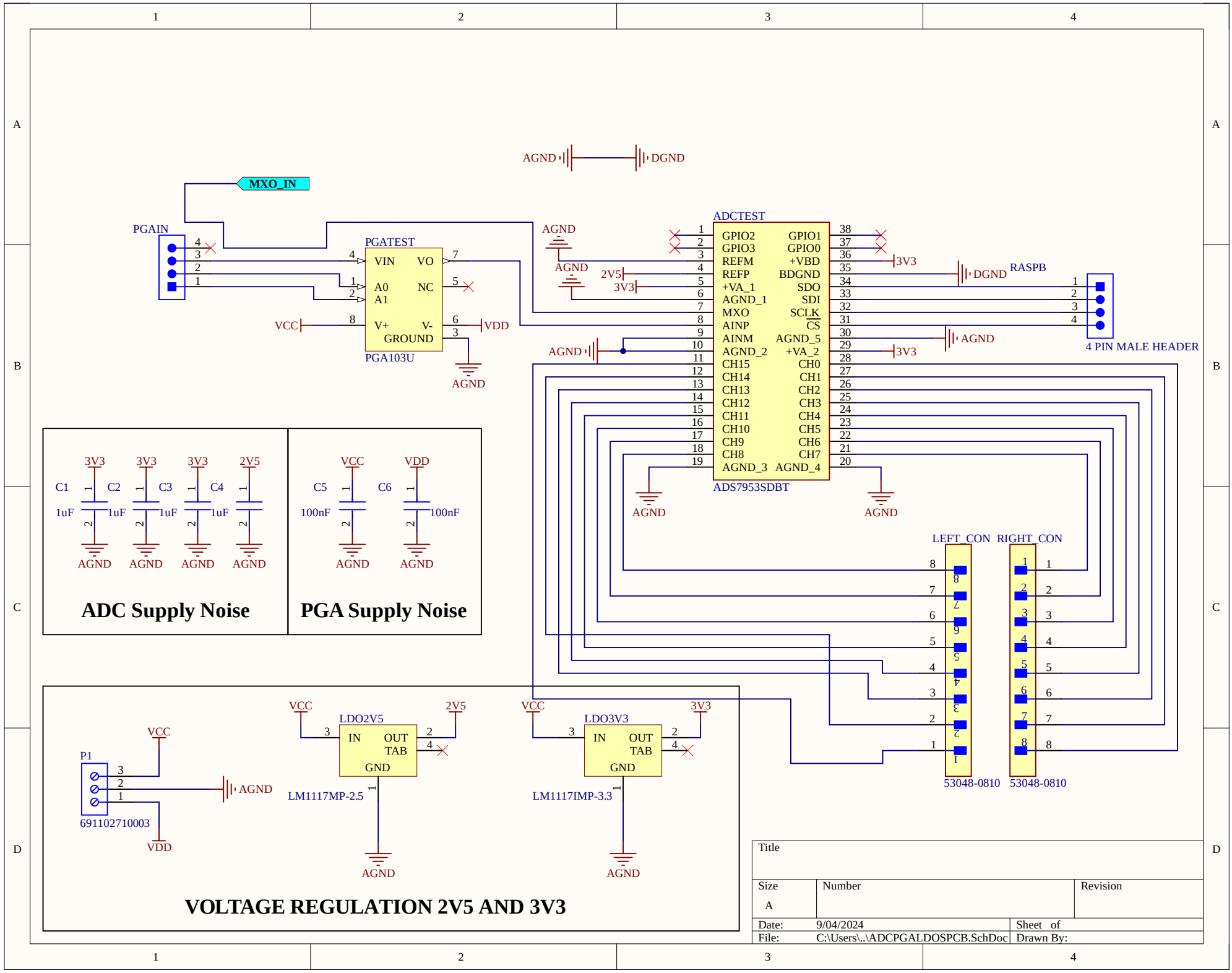
MXO_IN
PGAIN
PGATEST
VIN
VO
A0
NC
A1
V+
V-
GROUND
PGA103U
VCC
VDD
AGND
DGND
ADCTEST
GPIO2
GPIO1
GPIO3
GPIO0
REFM
+VBD
REFP
BDGND
+VA_1
SDO
AGND_1
SDI
MXO
SCLK
AINP
CS
AINM
AGND_5
AGND_2
+VA_2
CH15
CH0
CH14
CH1
CH13
CH2
CH12
CH3
CH11
CH4
CH10
CH5
CH9
CH6
CH8
CH7
AGND_3
AGND_4
ADS7953SDBT
2V5
3V3
RASPB
4 PIN MALE HEADER
LEFT_CON
RIGHT_CON
53048-0810
53048-0810
C1
C2
C3
C4
C5
C6
1uF
100nF
ADC Supply Noise
PGA Supply Noise
P1
691102710003
LDO2V5
IN
OUT
TAB
GND
LM1117MP-2.5
LDO3V3
LM1117IMP-3.3
VOLTAGE REGULATION 2V5 AND 3V3
Title
Size
A
Number
Revision
Date:
9/04/2024
Sheet of
File:
C:\Users\..\ADCPGALDOSPCB.SchDoc
Drawn By:

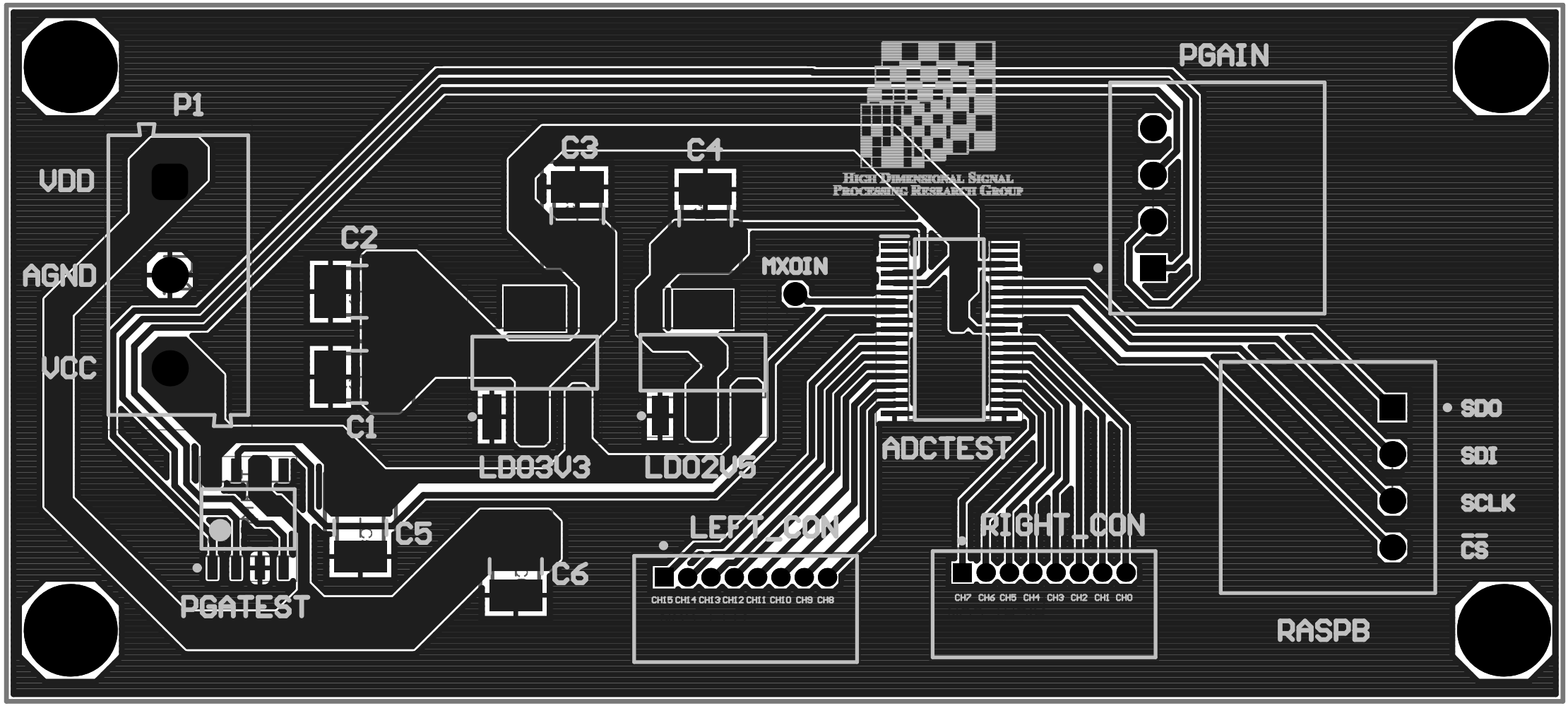
P1
VDD
AGND
VCC
C1
C2
C3
C4
C5
C6
LDO3V3
LDO2V5
MXOIN
PGAIN
ADCTEST
LEFT_CON
CH15 CH14 CH13 CH12 CH11 CH10 CH9 CH8
RIGHT_CON
CH7 CH6 CH5 CH4 CH3 CH2 CH1 CH0
PGATEST
RASPB
SDO
SDI
SCLK
CS
HIGH DIMENSIONAL SIGNAL
PROCESSING RESEARCH GROUP