Materials Today: Proceedings 79 (2023) 278–281

Contents lists available at ScienceDirect

Materials Today: Proceedings

journal homepage: www.elsevier.com/locate/matpr

Text encryption for lower text size: Design and implementation

Ankit Vishnoi [a], Alok Aggarwal [a,*], Ajay Prasad [a], Manish Prateek [b], Shalini Aggarwal [c]

[a] School of Computer Science, University of Petroleum and Energy Studies, Dehradun 258007, India
[b] School of Engineering and Science, GD Goenka University, Gurgaon 122103, India
[c] Graphic Era Hill University, Dehradun 258007, India

ARTICLE INFO

Article history:
Available online 18 November 2022

Keywords:
Data security
Cryptography
Homomorphic Transform
Text Encryption
Text Decryption
Hadamard Transform

ABSTRACT

For enterprises of all sizes and types in the IT sector, data security is essential. Data security is the process of giving databases and websites secure data privacy protections and preventing unauthorized data access. By encrypting digital data, software/hardware, and hard drives, unauthorized individuals or hackers can only access unreadable material, which is why encryption is a crucial data protection strategy. Data is produced by computing operations, which are then used to encrypt and send the data into the network. For low bandwidth channels, an encryption strategy has been put out in this work. The proposed method uses the properties of homomorphic transform to make it more unique and suitable for text encryption. Conversion of plain text to cipher text is done by using simple union and symmetric difference operators. Which makes it more reliable in terms of execution time.
Copyright © 2023 Elsevier Ltd. All rights reserved.
Selection and peer-review under responsibility of the scientific committee of the International Conference on Startup ventures: Technology Developments and Future Strategies.

1. Introduction

Most people and companies face concerns concerning data security and data breach of their important data and information due to the widespread usage of applications, gadgets, and the internet. Nearly every-one could become a victim of risks including phishing, wishful thinking, viruses, ransomware, and other dangers. Reactive and proactive tactics are the two scenarios that are intended to be used to handle such a circumstance. With a reactive strategy, our only options are to try to recover from the tragedy or lessen its damage. Nevertheless, we work to protect the data while it is in the system or in transit using a proactive strategy.

The key generation process, the number of rounds, the time necessary for encryption and decryption, and the amount of memory needed to store the data during the cryptographic process all affect how strong a cryptographic algorithm is. Cryptographic systems are computer systems that support cryptographic algorithms. As a result, the cryptographic system can be defined as a collection of cryptographic algorithms, key management systems, rounds, memory, processing power, and hash functions.

2. Related work

Today's technological advancements have increased the use and sharing of digital data, placing a premium on the security of that data. Textual data must be secure in order to protect messaging, passwords for email and bank accounts, and many other things. Similar to how medical photographs, personal images, military satellite images, bank building blueprints, and many other types of digital images need to be protected [1]. For secret text files and secret brief messages, many conventional techniques are employed. When the text to be encrypted is little, these methods are effective. However, as the text size increases, the effectiveness quickly decreases. Additionally, these methods occasionally have a poor level of security; this level will depend on the length of the PK and occasionally it may be compromised. In this work, a new technique to produce PK utilizing a secret speech file that may be changed will be presented in order to increase the level of data protection [2].

Musicians and cryptographers all over the world have always been fascinated by musical cryptograms. Such cryptograms are challenging to decipher since the alphabet can be considered musical notes in a variety of ways. The suggested approach encrypts and decrypts text file data using musical notes. A musical keyboard shows the time of accessing a file, and they are then asked to perform the musical password [3]. Chaos systems are frequently used

* Corresponding author.
E-mail address: alok.aggarwal@ddn.upes.ac.in (A. Aggarwal).

https://doi.org/10.1016/j.matpr.2022.11.118
2214-7853/Copyright © 2023 Elsevier Ltd. All rights reserved.
Selection and peer-review under responsibility of the scientific committee of the International Conference on Startup ventures: Technology Developments and Future Strategies.

in photo encryption techniques. An LB compound chaotic map is provided in this work, which can greatly improve the complexity of the original Baker and Logistic maps as well as the pseudo-randomness of the created sequences. Additionally, a method for picture encryption based on the LB compound chaotic map is proposed [4].

The study of using codes to conceal text and numbers is known as cryptography. One of the most often used cryptographic methods, Vertical Bit Rotation (VBR), is a one-way is to implement encryption using a hash function while posing a significant decryption challenge. The goal is to mimic the VBR hash method using bit rotation keys for binary value characters [5]. Real-time communications require the security of many data types, including text, pictures, and videos. Data transmission through insecure channels presents a persistent difficulty, particularly in large-scale Internet applications. It must be made easier to protect data's confidentiality and integrity from malicious attacks, unintentional destruction, change during transport or storage, and other threats. DES is regarded as the most popular symmetric-key method for usage in a variety of security applications [6].

Security has risen in importance in recent years in every communication technology. A number of methods have been used to send information securely. Encryption based on a chaotic system is one of the most significant encryption methods used in security. This study proposes, investigates, and implements a secure chaotic algorithm for text message encryption. This research is based on the use of two tiers of logistic maps that are chaotic in one dimension and have different initial circumstances [7]. The field of encryption has recently received a lot of attention due to the increase in the amount of information being stored and delivered electronically. The process of making the original data unreadable to outsiders is known as cryptography. The target image is transformed using the homomorphic transform into an 8x8 matrix, which is then transformed into encrypted data using straightforward mathematical procedures. the process of recovering the original image from the encrypted image in reverse. The finest image cryptography techniques are those that can retrieve the original data without altering it in any way. [8].

Information is as crucial as it has always been, but because we are currently living in the Information Era, it is even more crucial. Data security is a crucial component. The objective of this effort is to offer useful information on the safety of the cipher-text that we were given. The accuracy and authenticity of the material gathered, but only in those instances where it was deemed necessary. The tests conducted throughout the brief window of time allotted for such an activity are mostly utilized to pinpoint the problems in this endeavor [9]. The digitalization of information across a variety of platforms, including the web, applications, the internet, and portals, has experienced a significant rise in recent years. Personal information is in great danger as a result of the digitalization of the banking industry, telemedicine, bitcoin, and social media. Numerous techniques, including brute force and cryptographic analysis, can be used to extract anyone's data, including the message and key. Because of this, data security is now necessary, making information increasingly safe using modified versions of current technology to fend off attacks of this nature. An effective cryptographic method that can safeguard text communication is suggested in this study [10]. Many other works also concentrated based on hardware design [11–18], mobile adhoc networks [19–26], wireless based networks [27–35], soft handoff [36–40] and power control [41–44].

3. Methodology

An encryption and decryption strategy is suggested using a homomorphic transform. The three steps of the process are encryption, key creation, and decryption. A power-of-two sequence of sets A(r) of length R is used for encryption. Take the sequence (1,2,3), (2,3,4), (1,4,5), and (2,4,6) as an illustration. This sequence has four unique sets, A(1), A(2), A(3), and A(4). As seen in Fig. 1, the suggested procedure is applied to the aforementioned inputs A(1), A(2), A(3), and A(4).Fig. 2..

Depending on the user's preferences, the high-level model shows the application starting with either encryption or a decryption process. Fig. 3 illustrates the decrypting process.

4. Results

Entropy is useful in many domains, including cryptography. Measuring a system's randomness is a helpful approach to identifying the robustness of encryption. One technique to determine whether an encryption algorithm is effective is whether the generated cipher text is not a random binary string. In an encryption technique, it is desirable for the ciphertext to be entirely opaque to the associated plaintext.

There are many ways to calculate entropy. The type of entropy that is most frequently used in cryptography is Shannon entropy. This has to do with cryptography and how many 0 s and 1 s are there in the ciphertext. The less random the ciphertext is, the less information may be learned about the linked plaintext. The entropy was computed for each encrypted file in the experiment using 50 distinct plain text files. The histogram of the entropy values obtained from encrypted data is displayed in Fig. 3.

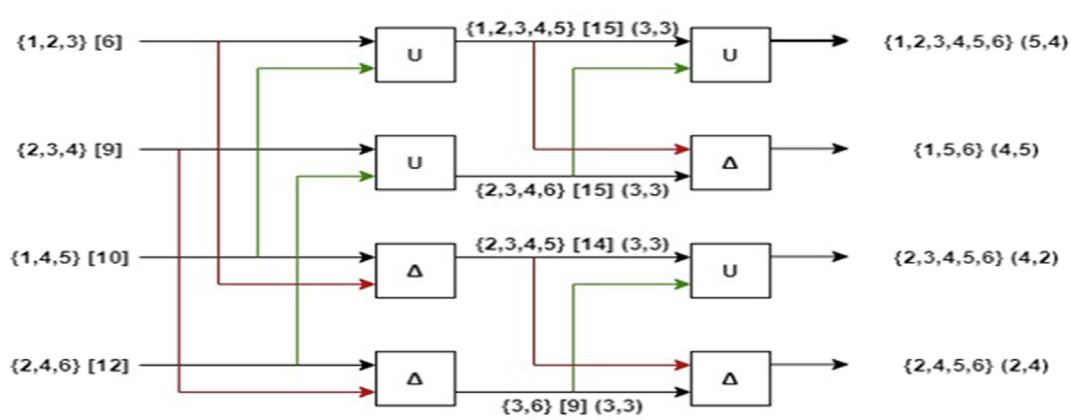

Fig. 1. Encryption.

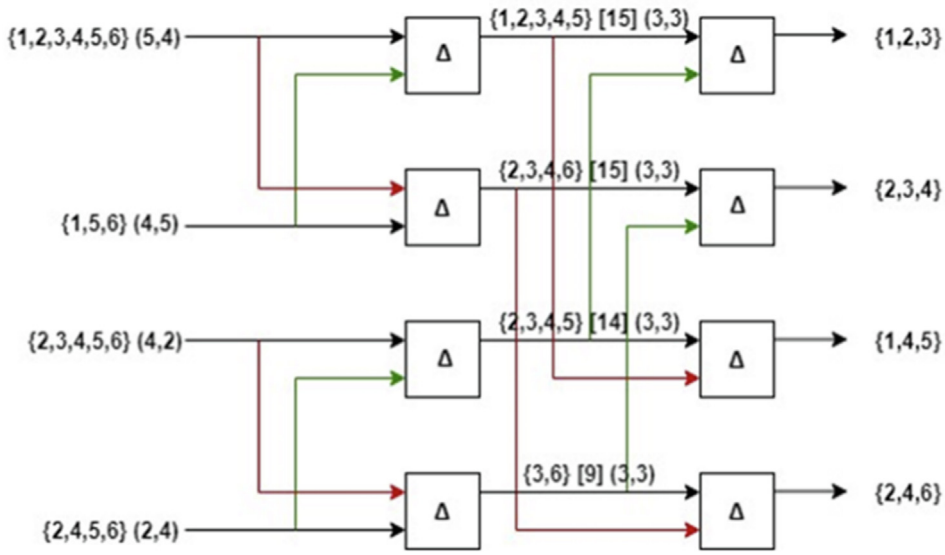

Fig. 2. Decryption.

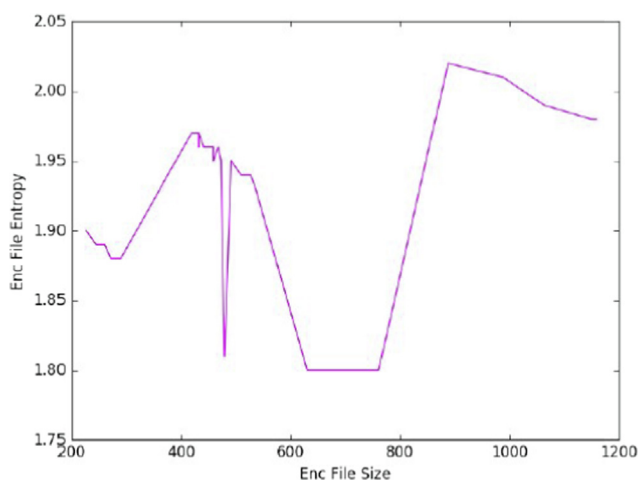

Fig. 3. Entropy values from the encryption file's histogram.

Fig. 3 depicts how a histogram of an encrypted file looks. Almost 2 is the entropy of encrypted files. If there is fewer than 1, they wouldn't be properly encrypted. Patterns lead to reduced entropy, which explains why weak encryption has lower quality, and strong encryption has greater entropy requirements.

The average entropy value of the suggested algorithm is more than two but less than DES, 3DES, AES, and RSA, as shown in Fig. 4. As a result, the suggested approach exhibits a sufficient level of entropy to qualify as a cryptographic approach.

5. Conclusion

The entropy is determined using the parameter assigned for modern encryption methods, which are isomorphic in nature and have a one-to-one mapping between input and output While the suggested methodology is homomorphic in nature, mapping a single input to several outputs. It will get a distinct value of cipher text each time it encrypts plain text. As a result, the proposed approach's entropy, which has an average value close to 2, is for

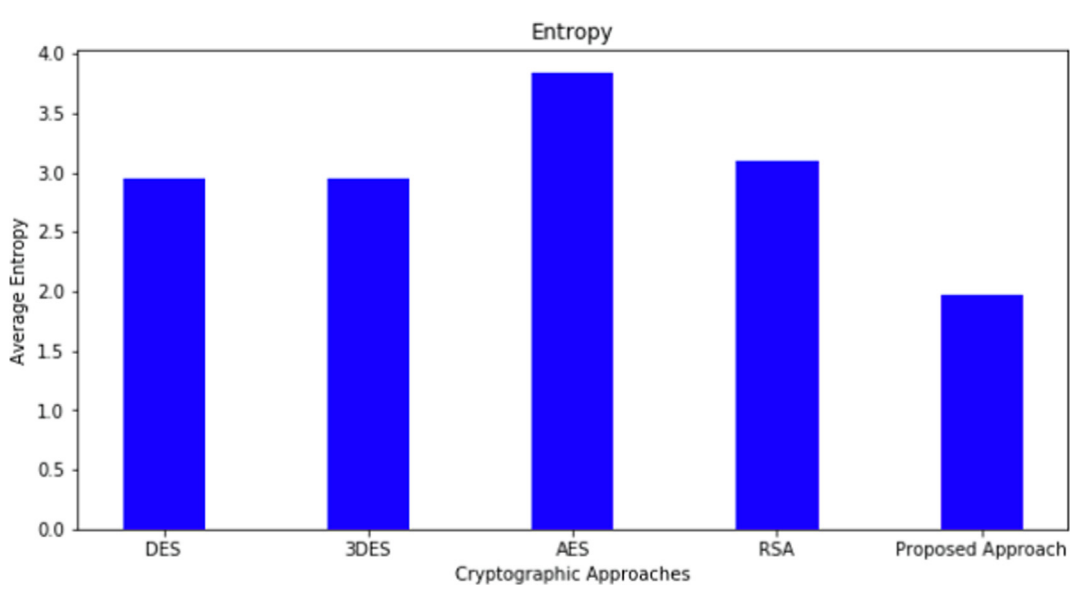

Fig. 4. Comparison of the average entropy of various cryptographic methods with the proposed method.

isomorphic processes rather than homomorphic processes. Due to the unique nature of the homomorphic transform used in this work's cryptography, there is no way to determine the entropy. The effort ensures that the value of each output is distinct from the others since entropy indicates the degree of uniqueness in cipher text. This technique's implementation focuses on shortening the encrypted message, which makes it more difficult for an attacker to decipher the data. The key is generated by the message and is then sent with the message that has been encrypted. The key has the same length as the ciphertext, and the ciphertext is then decrypted to reveal the original message. Finally, the space required by the original message and the encrypted text is equal.

Data availability

Data will be made available on request.

Declaration of Competing Interest

The authors declare that they have no known competing financial interests or personal relationships that could have appeared to influence the work reported in this paper..

References

[1] V.R. Folifack Signing, T. Fozin Fonzin, M. Kountchou, J. Kengne, Z.T. Njitacke, Chaotic jerk system with hump structure for text and image encryption using DNA coding, Circuits Syst. Signal Process. 40 (9) (2021) 4370–4406.

[2] M.M. Abu-Faraj et al., DetGas: a carbon monoxide gas leakage detector mobile application, J. Comput. Sci. Network Security 21 (12) (2021) 53–60, https://doi.org/10.22937/IJCSNS.2021.21.12.8.

[3] Krishnan R et al. An Intelligent Text Encryption System Using Musical Notes. In: Raj, J.S. et al, (eds) Innovative Data Comm. Tech. and App. *Lecture Notes on Data Engg. and Comm. Tech.*, Springer, Singapore 2021. https://doi.org/10.1007/978-981-15-9651-3_38.

[4] S. Zhang, L. Liu, H. Xiang, A novel plain-text related image encryption algorithm based on LB compound chaotic map, Mathematics 9 (21) (2021) 2778, https://doi.org/10.3390/math9212778.

[5] D.A.A. Pertiwi, D. Djuniadi, Simulations of text encryption and decryption by applying vertical bit rotation algorithm, J. Soft Comput. Explor. 2 (2) (2021) 61–66.

[6] Reyad O et al. Key-Based Enhancement of Data Encryption Standard For Text Security. In: *Proc. NCCC* 2021, pp. 1-6. doi: 10.1109/NCCC49330.2021.9428818.

[7] Zahraa A, Msekh ,and Saad S Hreshee. Implementation of a Chaos-Based Symmetric Text Encryption Using Arduino Microcontrollers, *J. Phys.* 2021. https://doi.org/10.1088/1742-6596/1963/1/012086

[8] A. Vishnoi et al., Image encryption using homomorphic transform, In: *Int. Conf. ICICICT* (2022) 1455–1459.

[9] A. Vishnoi et al., A cryptosystem analysis for text messages using homomorphic transform, In: *Int. Conf. ICICICT* (2022) 1445–1450.

[10] A. Vishnoi et al., An improved cryptographic technique using homomorphic transform, In: *Int. Conf. ICICICT* (2022) 1451–1454.

[11] Goyal M.K. et al. QoS based trust management model for Cloud IaaS. In: *2nd Inter. Conf. on PDGC* 2012, pp. 843-847.

[12] A. Kumar, G. Krishan, et al., Design and analysis of lightweight trust mechanism for secret data using lightweight cryptographic primitives in MANETs, Inter. J. N/w Security 18 (1) (2016) 1–18.

[13] A. Kumar, G. Krishan, et al., A novel trusted hierarchy construction for RFID-sensor based secure mobile Ad Hoc NETworks (MANETs) using error correcting codes (ECCs), Electron. Tele. Res. Instt. J. 37 (1) (2015) 186–196.

[14] K. Adarsh et al., Outlier detection and treatment for lightweight mobile Ad Hoc networks, *Lect. Notes Instt. Comp. Sc., Social Info.* & *Tele. Engg.* 115 (2013) 750–763.

[15] Kumar A, Aggarwal A, Charu. Efficient Hierarchical Threshold Symmetric Group Key Management Protocol for Mobile Ad Hoc Networks. In: Parashar et al. (eds) *Contem. Computing, Commu. in Computer and Infor. Sc.* 2012, 306, pp. 335-346.

[16] A. Kumar, G. Krishan, A. Aggarwal, A novel lightweight key management scheme for RFID-sensor integrated hierarchical MANET based on internet of things, Inter. J. Adv. Intel. Paradigms 9 (2–3) (2017) 220–245.

[17] A. Kumar, G. Krishan, et al., Design and analysis of lightweight trust mechanism for accessing data in MANETs, KSII Trans. Internet Infor. Syst. 8 (3) (2014) 1119–1143.

[18] Kumar A, Krishan G, et al. Simulation and Analysis of Authentication Protocols for Mobile Internet of Things (MIoT). In: *Proc. 3rd Inter. Conf. on PDGC* 2014, pp. 423-428.

[19] P. Gupta et al., Trust and reliability based scheduling algorithm for cloud IaaS, In: *Lect. Notes Elec. Engg.* 150 (2013) 603–607.

[20] A. Kumar, A. Aggarwal, Lightweight Cryptographic Primitives for Mobile Ad Hoc Networks, Recent Trends in Comp. Net. & Distributed Systems Security Comm. in Computer and Infor, 335, Science, 2012, pp. 240–251.

[21] Kumar A, Aggarwal A, and Charu. Performance analysis of MANET using elliptic curve cryptosystem. In: 14th Inter. Conf. on Adv. Comm. Tech. (ICACT) 2012, pp. 201-206.

[22] Goyal MK, Aggarwal A. Composing Signatures for Misuse Intrusion Detection System Using Genetic Algorithm in an Offline Environment. In: N. Meghanathan et al. (eds) Adv. in Compu. and Infor. Tech., Adv. in Intelligent Systems and Comp. 2012, 176, pp 151–157.

[23] Adarsh Kumar et al. A complete, efficient and lightweight cryptography solution for resource constraints Mobile Ad-Hoc Networks. In; Proc. PDGC 2012, pp. 854-860.

[24] Sangeeta Mittal et al. Application of Bayesian Belief Networks for context extraction from wireless sensors data. In: 14th Inter. Conf. on Advanced Comm. Tech. (ICACT) 2012, pp. 410-415.

[25] N. Chugh et al. Security aspects of a RFID-sensor integrated low-powered devices for Internet-of-Things. In: 4th Inter. Conf. on PDGC 2016, pp. 759-763.

[26] T. Singh et al., A novel approach for CPU utilization on a multicore paradigm using parallel quicksort, in: In: *3rd Inter. Conf. on Compu. Intelligence & Comm. Tech*, (CICT), 2017, pp. 1–6.

[27] Kumar A., Gopal K., and Aggarwal A. Simulation and Cost Analysis of Group Authentication Protocols. In: *Inter. Conf. on Contemporary Computing* 2016, pp. 1-7.

[28] M. Chakradar et al., A non-invasive approach to identify insulin resistance with triglycerides and HDL-c ratio using machine learning, Neural Process. Lett. 52 (3) (2021).

[29] Mittal S. et al. Situation recognition in sensor based environments using concept lattices. In: *Proc. Inter. Infor. Tech. Conf.* 2012, pp. 579-584.

[30] A. Kumar, A. Aggarwal, An efficient simulated annealing based constrained optimization approach for outlier detection mechanism in RFID-sensor integrated MANET, Inter. J. Comput. Infor. Syst. Indus. Mgt. App. 11 (2019) 55–64.

[31] Gupta S. K. et al. Routing Algorithm for Energy Conservation in MANET. In: Inter. Conf. on Compu. Intelligence and Comm. Networks (CICN) 2015, pp. 165-167.

[32] A. Kumar et al., Cost and lightweight modeling analysis of RFID authentication protocols in resource constraint internet of things, J. Comm. S/w Syst. 10 (3) (2014) 179–187.

[33] V. Singh et al., A holistic, proactive and novel approach for pre, during and post migration validation from subversion to git, Comput., Mater. Contin. 66 (3) (2021) 2359–2371.

[34] S. Aggarwal et al., Optimized method of power control during soft handoff in downlink direction of WCDMA systems, in: Proc. Int. Conf, PDGC, 2014, pp. 433–438.

[35] Rajput I.S. et al. An efficient parallel searching algorithm on Hypercube Interconnection network. In: *Proc. Int. Conf. PDGC* 2012, pp. 101-106.

[36] M.K. Goyal et al. Effect of change in rate of genetic algorithm operator on composition of signatures for misuse intrusion detection system. In: *Proc. Int. Conf. PDGC* 2012, pp. 669-672.

[37] Shalini Aggarwal et al. Performance analysis of soft handoff algorithm using fuzzy logic in CDMA systems. In: *Proc. Int. Conf. PDGC* 2012, pp. 586-591.

[38] B. Deepak et al., Automatic text recognition in natural scene and its translation into user defined language, In: *Proc. Int. Conf. PDGC* (2014) 324–329.

[39] Shalini Aggarwal et al.]On challenges and opportunities in second wave of ICT revolution for south Asian countries. In: *Proc. Int. Conf. PDGC* 2012, pp. 597-602.

[40] Singh Vinay et al. A digital Transformation Approach for Event Driven Micro-services Architecture residing within Advanced vcs, In: *Proc.* Inter. Conf. CENTCON 2021, pp. 100-105.

[41] S. Aggarwal et al. Trends in power control during soft handoff in downlink direction of 3G WCDMA cellular networks. In: *Proc. Int. Conf. PDGC* 2012, pp. 603-608.

[42] V. Singh et al. DevOps based migration aspects from Legacy Version Control System to Advanced Distributed VCS for deploying Micro-services. In: *Proc.* Int. Conf. CSITSS 2021, pp. 1-5.

[43] Aggarwal S. et al. Soft handoff analysis and its effects on downlink capacity of 3G CDMA cellular networks. In: *Proc. Int. Conf. PDGC* 2012, pp. 1-6.

[44] Govil K., Aggarwal A., Gupta S. Cluster Head Selection Technique for Optimization of Energy Conservation in MANET. In: *Proc. 3rd Inter. Conf. on PDGC* 2014, pp. 39-42.