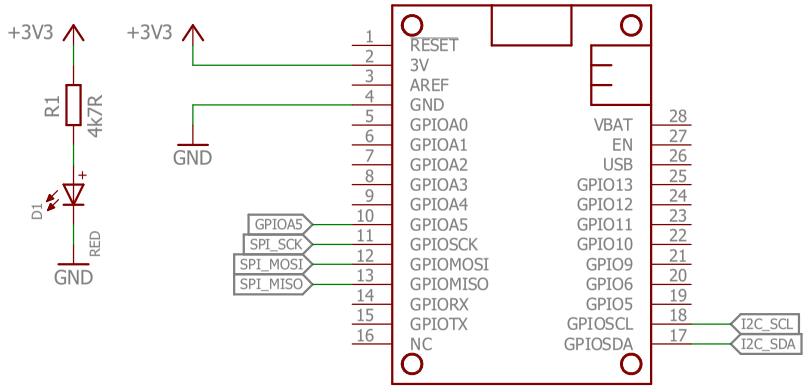

FEATHERWING FORM FACTOR

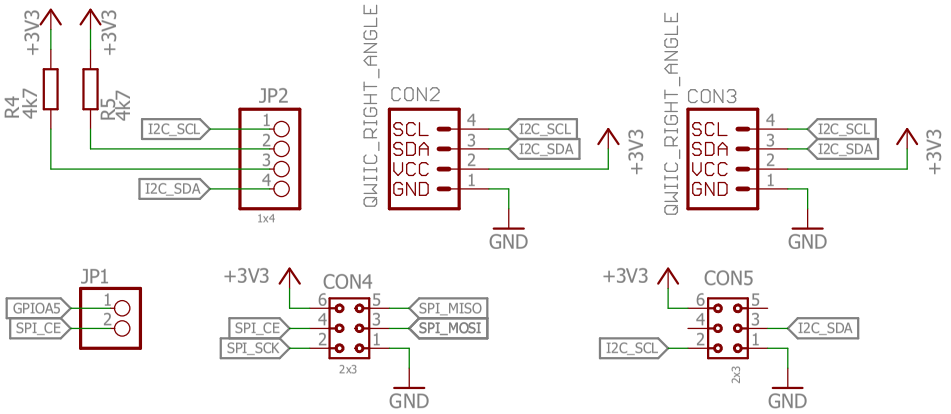

I2C AND SPI CONNECTORS

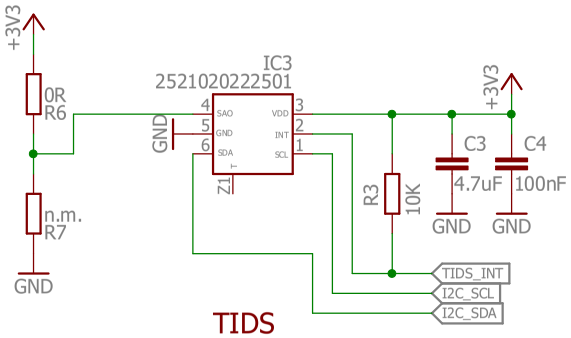

TIDS

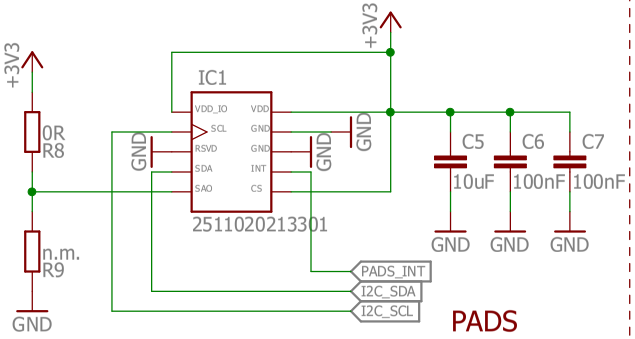

PADS

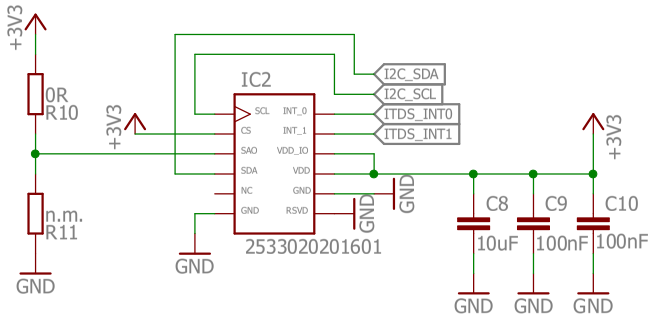

ITDS

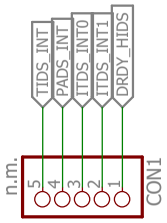

SENSOR INTERRUPTS

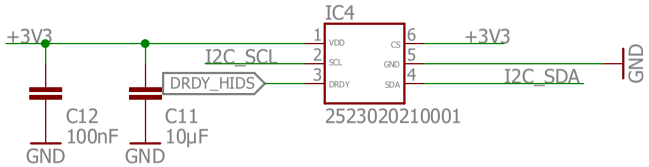

HIDS

WÜRTH ELEKTRONIK

Sensor FeatherWing

2501000201291
2501000201290

250100020129x-HW-V2.0

29.05.2020 12:01

Sheet: 1/1