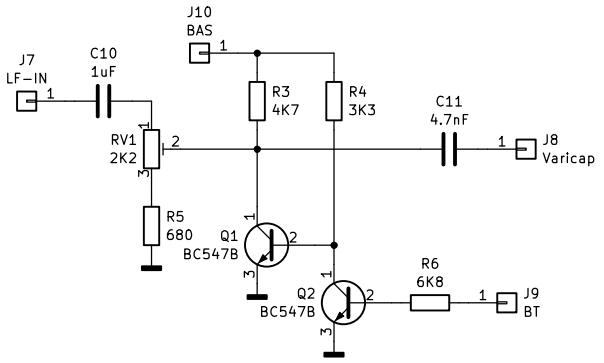

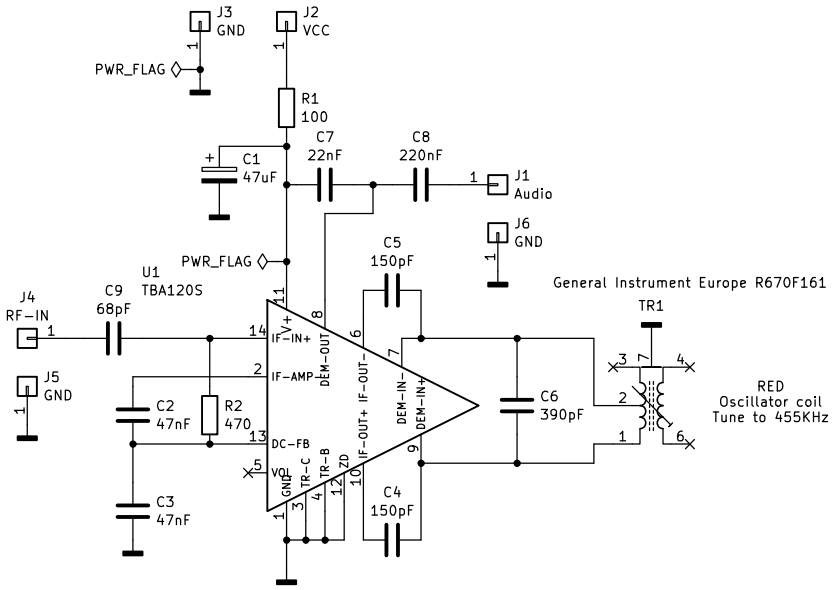

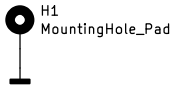

Jef Collin

Sheet: /

File: fm_demod_mod_1_1.kicad_sch

Title: FM demodulator modulator

Size: A4	Date: 2024-10-03	**Rev: 1.1**
KiCad E.D.A. 8.0.5		Id: 1/1