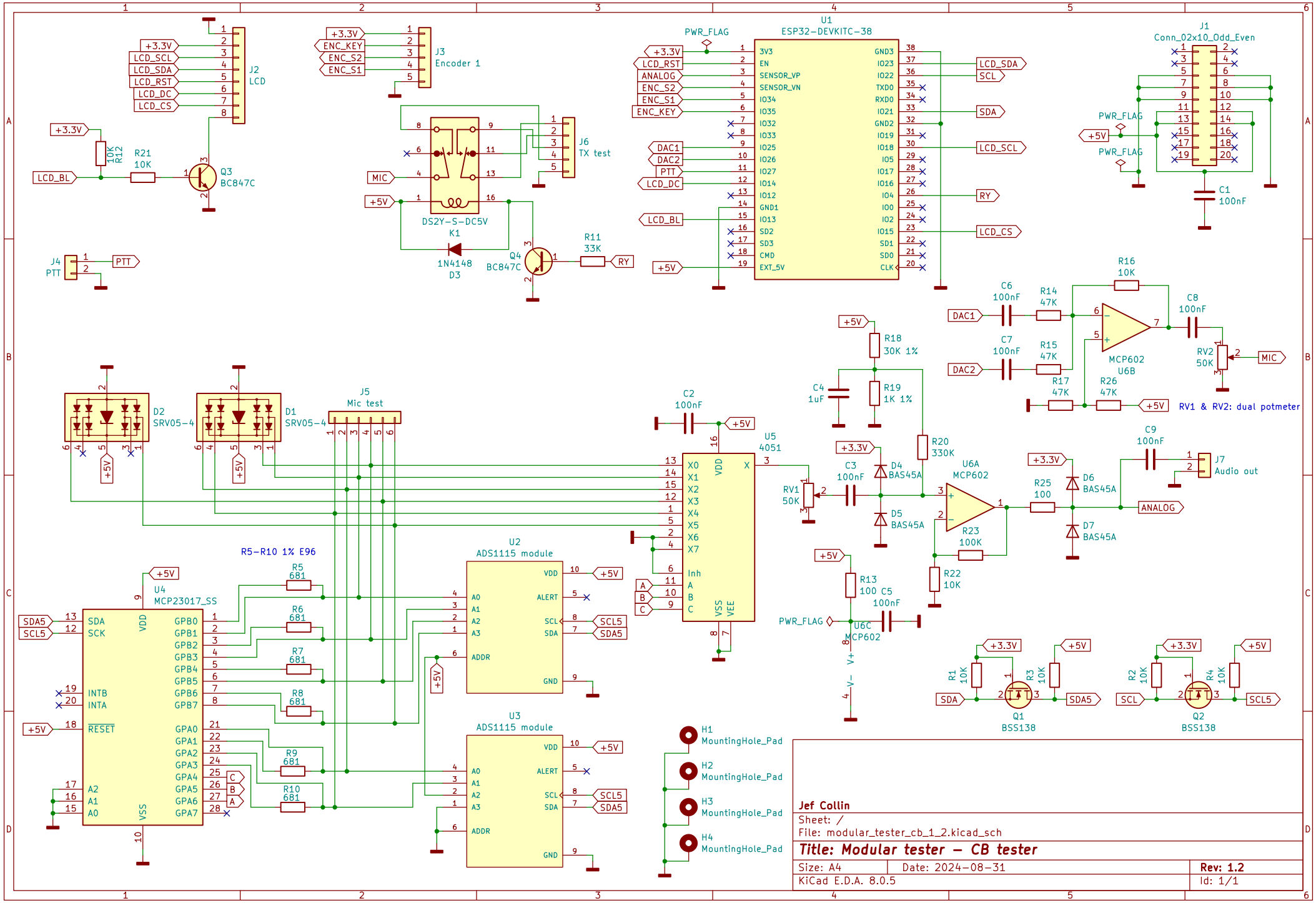
J2
LCD
+3.3V
LCD_SCL
LCD_SDA
LCD_RST
LCD_DC
LCD_CS
R21
10K
R12
10K
LCD_BL
Q3
BC847C
J3
Encoder 1
ENC_KEY
ENC_S2
ENC_S1
J6
TX test
MIC
+5V
DS2Y-S-DC5V
K1
1N4148
D3
Q4
BC847C
R11
33K
RY
J4
PTT
U1
ESP32-DEVKITC-38
PWR_FLAG
ANALOG
DAC1
DAC2
J1
Conn_02x10_Odd_Even
C1
100nF
C6
100nF
R14
47K
R16
10K
C8
100nF
C7
100nF
R15
47K
MCP602
U6B
RV2
50K
R17
47K
R26
47K
RV1 & RV2: dual potmeter
R18
30K 1%
C4
1uF
R19
1K 1%
R20
330K
D2
SRV05-4
D1
SRV05-4
J5
Mic test
C2
100nF
U5
4051
RV1
50K
C3
100nF
D4
BAS45A
D5
BAS45A
U6A
MCP602
R23
100K
R22
10K
R25
100
D6
BAS45A
D7
BAS45A
C9
100nF
J7
Audio out
R13
100
C5
100nF
U6C
MCP602
R5-R10 1% E96
U4
MCP23017_SS
SDA5
SCL5
R5
681
R6
681
R7
681
R8
681
R9
681
R10
681
U2
ADS1115 module
U3
ADS1115 module
R1
10K
R3
10K
Q1
BSS138
R2
10K
R4
10K
Q2
BSS138
H1
MountingHole_Pad
H2
MountingHole_Pad
H3
MountingHole_Pad
H4
MountingHole_Pad
Jef Collin
Sheet: /
File: modular_tester_cb_1_2.kicad_sch
Title: Modular tester – CB tester
Size: A4
Date: 2024-08-31
Rev: 1.2
KiCad E.D.A. 8.0.5
Id: 1/1