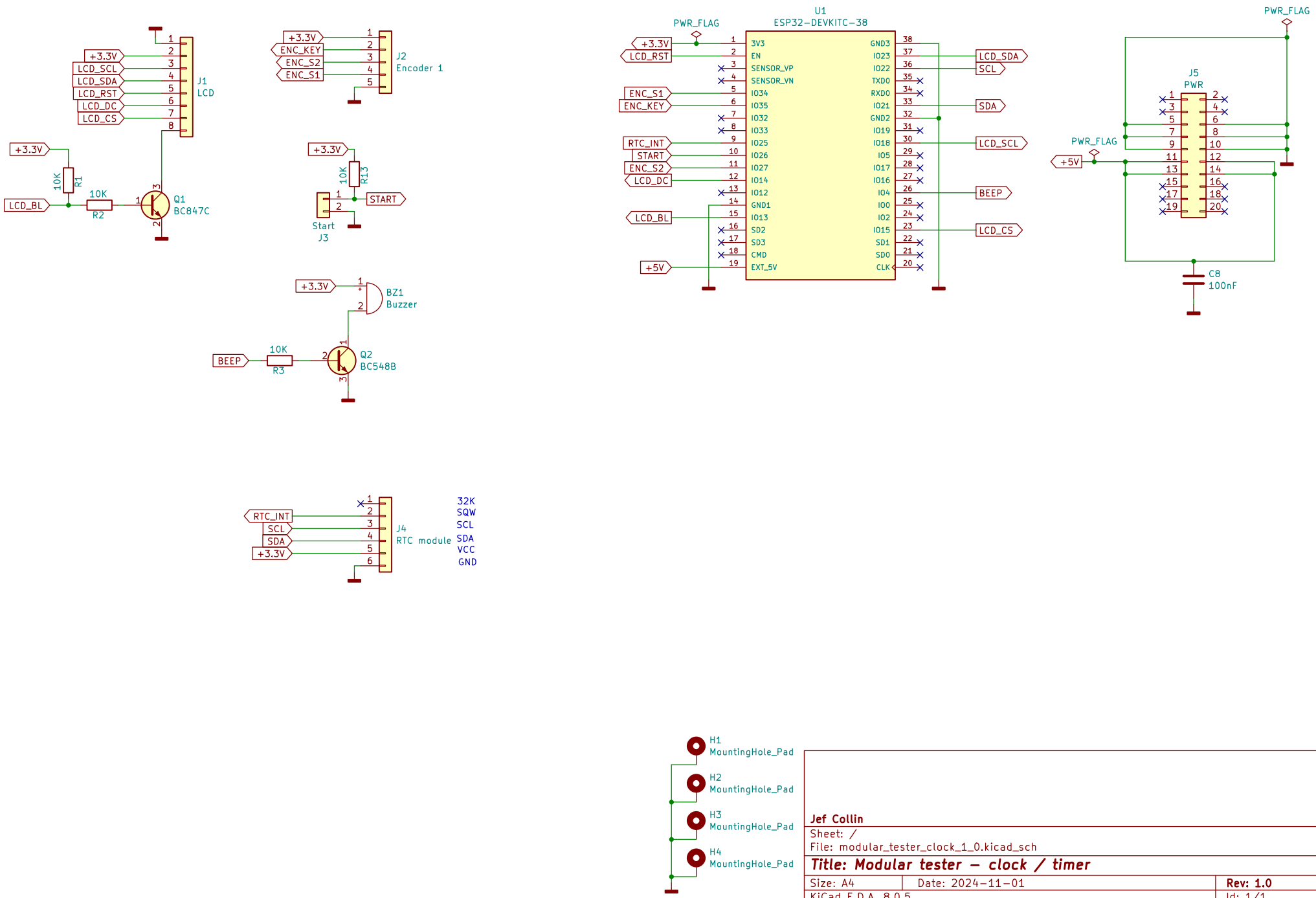

Jef Collin

Sheet: /

File: modular_tester_clock_1_0.kicad_sch

Title: Modular tester – clock / timer

Size: A4	Date: 2024-11-01	Rev: 1.0
KiCad E.D.A. 8.0.5		Id: 1/1