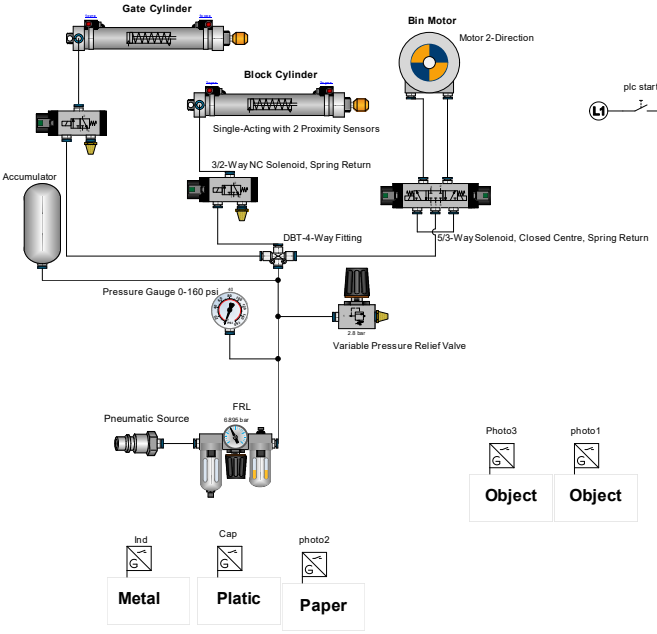

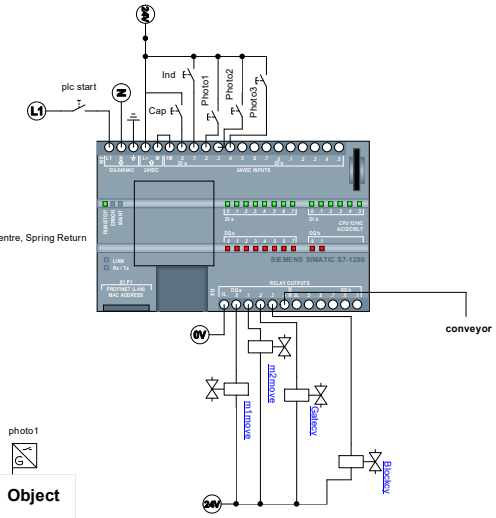

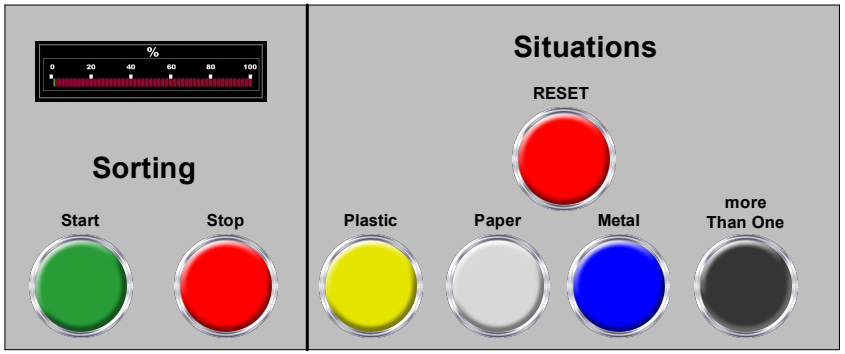
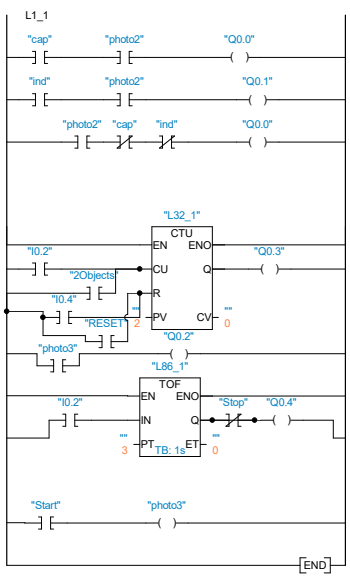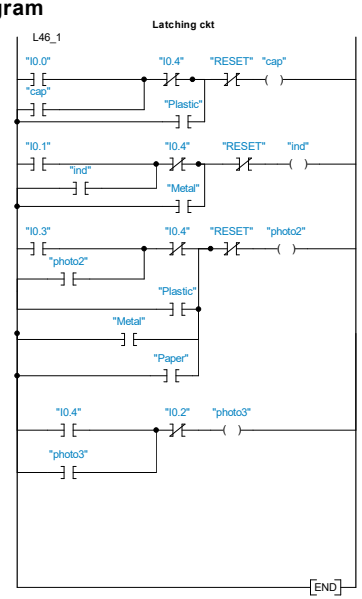
Ladder Diagram