Using neural networks to develop a multimodal emotion detection model using audio and video data.

Master of Science in Artificial Intelligence, 2023/2024

SUPERVISOR: ABDULRAHMAN ALSEWARI

STUDENT NAME: JAY PAREKH STUDENT NO:14140141

Abstract

Emotion detection is a critical component of human-computer interaction systems, with applications ranging from healthcare to customer service. Existing emotion detection models often face challenges related to cultural and demographic biases, as well as limitations in data diversity and model generalization. This project addresses these challenges by proposing a novel multimodal emotion detection model that integrates both audio and video data, leveraging techniques such as facial landmark detection and audio feature extraction. The model architecture combines MobileNet with Bidirectional Long Short-Term Memory (BiLSTM) layers, followed by global pooling and dense layers, allowing for deep learning on over 10 million features. Data preprocessing techniques, including down sampling and feature extraction, are employed to enhance model efficiency and accuracy. Evaluation of the proposed model involves comprehensive performance assessment using various metrics and comparative analysis with existing approaches. The results demonstrate the effectiveness of the proposed model in achieving robust and accurate emotion detection across diverse cultural and demographic contexts, paving the way for applications in healthcare, education, and beyond.

Contents

Abstract 1
Chapter 1: Introduction 3
1.1 Background 3
1.2 Research questions 4
1.3 Aims and objectives 4
1.4 Scope 4
1.5 Ethical considerations 5
1.6 Dissertation structure 6
1.7 Project timeline 7
Chapter 2: Literature review 9
2.1 Comparative analysis of machine learning techniques for emotion detection 10
2.2 Existing approaches in emotion detection using machine learning 11
2.3 Advancing emotion detection 12
2.4 Improvements in image-based emotion detection using BiLSTMs 12
2.5 Improvements in deep learning for emotion detection 14
2.6 Improved techniques for ensemble models in emotion detection 15
2.7 Different approaches applied previously for multimodal processing 16
2.8 Machine learning algorithms applied previously to emotion detection 17
Chapter 3: Methodology 19
3.1 Data Collection 22
3.2 Data preprocessing 31
3.3 Model architecture 33
3.4 Model evaluation and visualization 35
3.5 Testing 35
3.6 Research design rationale 36
3.7 Similar research and findings 36
3.8 Continuous improvement 36
3.9 Future work 36
Chapter 4: Design and Development 37
Chapter 5: Evaluation and testing 37
Chapter 6: Results discussion 38
Chapter 7: Conclusion 38
References 39

Chapter 1: Introduction

1.1 Background

A cornerstone in the domain of emotion detection, Artificial Intelligence, or AI, revolutionises the way emotions are understood and interpreted. By analysing the diverse range of modalities that are available, such as facial expressions, speech patterns, physiological signals, as well as text, AI based systems allow emotional states to be understood like never before, providing unparalleled accuracy and efficiency.

AI emotion detection tools translate across several data centric fields, each offering a unique set of insights as well as capabilities. In the mental health care industry, patients can be regularly monitored remotely to diagnose and evaluate their emotional wellbeing, complementing traditional evaluation methods for an increased quality of care as well as risk reduction. In an educational environment, AI emotion detection tools provide invaluable insights into the engagement levels, emotional responses to learning resources as well as the student's overall wellbeing, which is otherwise difficult to obtain. The insights obtained can assist staff in providing personalised and effective approaches for their services.

Moreover, AI-powered emotion detection has caused a revolution amongst customer service and marketing strategies across industries. Through the analysis of customer sentiment using facial expressions, speech intonation, as well as textual cues, businesses can tailor their products, services, and marketing campaigns specifically to accommodate their target audience, regardless of their sentiment. As a result of the AI models, the businesses are also able to expand their target audience A hyper personalized approach not only enhances customer satisfaction but also fosters brand loyalty thus driving business growth.

Although emotion detection models have a transformative ability, the technology faces some challenges and limitations. At the forefront of these are ethical considerations as well as privacy implications, from the analysis of personal data, which is sensitive. Emotion detection models rely heavily on data collection to improve their performance, which brings up the challenges of data privacy, consent to process data as well as the risk of the data being misused or exploited. The safeguarding of the privacy rights of individuals proves to be a crucial consideration for developers as well as policymakers, who are responsible for widespread deployment of such technologies.

The utilization of facial recognition technology (FRT) exacerbates the existing racial disparities in arrests (Johnson et al., 2022). Due to the issues, it is proven that the accuracy, as well as the reliability of emotion detection models can vary amongst demographic groups and cultures. Training data biases are prevalent in the majority of data sources and thus bring about disparities in the trained model which perpetuate stereotypes, tainting fairness. When an emotion detection model is created, biases should be addressed before any consideration of deployment. By addressing biases before deployment, developers can ensure the emotion detection model provides fair results across a range of diverse variables, which contribute to good ethics and inclusivity in real world applications.

For emotion detection models, the benefits of the technology by far outweigh the challenges faced. From the improvement of mental health care to the enrichment of educational programmes and the enhancement of the customer experience, emotion detection models are

poised to drive business innovation, revolutionizing the way emotions are understood, interpreted and responded to. As long as the ethical, privacy and bias based concerns are navigated with due diligence, the full potential of AI used in emotion detection can be harnessed, safeguarding the rights of individuals while social equity and inclusion is promoted.

1.2 Research questions

1. How well does the emotion detection deep learning model classify emotions across diverse input modalities?
2. What analyses can be drawn comparatively among different deep learning architectures for emotion detection for their effectiveness and robustness?
3. How does the performance of the evaluated deep learning model for emotion detection differ from conventional machine learning techniques?
4. What effect does varying degrees of data augmentation have on enhancing the performance of deep learning models in emotion detection?
5. What is the deep learning models resiliency to variations in input modalities for speech and facial expressions?
6. How does domain-specific knowledge in the training pipeline of deep learning models implicate emotion detection accuracy?

1.3 Aims and objectives

Using neural networks to develop a multimodal emotion detection model using audio and video data.

1. Obtain a large dataset of audio and video with high diversity designed for emotion detection.
2. Visualize and extract features from the dataset and then split the data into training, testing and validation arrays.
3. Build and tune separate audio and video deep neural networks and join their outputs to classify emotions.
4. Evaluate the performance of the model using the validation accuracy from model training, a classification report and confusion matrix.
5. Discuss the methodology used for dataset selection, model conceptualization, and model assembly, elaborating on the results as well as any conclusions drawn.

1.4 Scope

Ethical considerations related to privacy, bias, and fairness in emotion detection technologies are examined, along with strategies to mitigate potential risks and biases.

The dissertation provides an analysis of the application domains for emotion detection models and reviews the scalability, robustness, efficiency and accuracy of various machine learning techniques while taking ethics into consideration. Multimodal emotion detection models have been investigated thoroughly, particularly those involving deep learning techniques. Quick detection of nuances in emotion detection data is crucial for catching emotional cues from data.

This research aims to address the significant challenge of emotion detection across modalities by leveraging ensemble fusion models in a bid to improve model accuracy. State-of-the-art deep learning architectures and methodologies are identified for accurate and efficient emotion detection from multiple modalities. The research explores fusion techniques to combine information from multiple modalities, such as audio and video, for enhanced emotion recognition accuracy and robustness.

The RAVDESS dataset, containing 7356 files with 8 emotions is identified and selected as the most effective dataset and the audio and video data are inspected along with their label data.

Deep learning models are developed and tested for computational cost and memory efficiency, including convolutional neural networks (CNNs), recurrent neural networks (RNNs), and their variants such as LSTM (Long Short-Term Memory) and BiLSTM (Bidirectional LSTM), tailored to multimodal emotion detection tasks. This includes the optimization of model architectures and automatic tuning of hyperparameters to achieve optimal performance. Trained models are validated using appropriate evaluation metrics such as validation accuracy, classification reports and confusion matrices on separate test datasets to ensure generalization.

The dissertation focuses on improving upon state-of-the-art techniques used for multimodal emotion detection but as a result may improve upon techniques used for multimodal modelling. Ultimately, the research aims to contribute to the advancement of multimodal emotion detection models to influence emotional well-being, promote inclusivity, fostering positive human interactions through affective emotion detection technologies.

Finally, the scope of this dissertation is focused on expanding understanding and practical applications of machine learning in sustainable agriculture, with a particular emphasis on tomato leaf disease detection as a case study.

1.5 Ethical considerations

Consent of participation

Any data used should have informed consent from the individuals responsible for creating the data. Any dataset with a creative commons license has informed consent.

Data confidentiality and privacy

Any personal information collected as a result of emotion detection should be anonymised upon entering the feature space, any sensitive information should be stored securely in a password protected database to maintain confidentiality.

Ethical compliance

Adhering strictly to ethical guidelines and legal frameworks to uphold ethical standards.

Bias mitigation and fairness

Biases will be mitigated during data collection and feature extraction to ensure demographic groups are represented diversely, preventing unfair outcomes and Taking proactive measures to mitigate biases in data collection and analysis, ensuring diverse representation across demographic groups to promote inclusivity and prevent unfair outcomes.

Transparency and accountability

Methodologies and their associated processes will be documented clearly to maintain transparency in their practices and accountability in their findings.

Responsible technology use

Development of emotion detection models which focus on promoting emotional well-being while respecting individual autonomy and addressing potential risks or unintended consequences of technology use.

Stakeholder engagement

Appropriate stakeholders will be consulted for perspective incorporation as well as being given the opportunity to express any concerns with the project to ensure the completed model meets their needs.

1.6 Dissertation structure

Chapter 1: Introduction:

This chapter discusses the evolution of emotion detection as well as its limitations. The research questions, aim and objectives were defined before the scope and ethical considerations of the project were evaluated

Chapter 2: Literature Review:

New and old advancements in the field of emotion detection are collected and compared, reviewing the strengths and limitations of each approach and collating the suggested improvements to form a state-of-the-art baseline to further develop off of.

Chapter 3: Methodology:

The process of data collection, preprocessing, and model development are outlined, providing a method of project replication for validation of the techniques applied during the research process. The section focuses on providing a transparent and thorough experimental design.

Chapter 4: Model Development:

The development and tuning techniques of the model were highlighted, explaining the reasoning behind the specifications of each component of the architecture. The approach allows researchers to delve into the technical considerations or the research.

Chapter 5: Evaluation and Validation:

In this chapter, the performance of the developed models is rigorously evaluated and validated. Various metrics and evaluation criteria are employed to assess the accuracy and efficacy of the models in detecting emotions. The findings of the evaluation process are presented and analysed to draw meaningful conclusions.

Chapter 6: Results and Discussion:

The chapter discusses a comprehensive analysis of the findings, encapsulating the significance of the implications faced as part of the developmental process, when applied to the outcomes of the research.

Chapter 7: Conclusion and Future Directions:

Summarising the findings and conclusions drawn, the final chapter describes the contributions made within the domain of the research and provides insights into the future direction of the research, in an aim to contribute to the field of emotion detection.

1.7 Project timeline

Project scheduling is a cornerstone of effective project management, playing a crucial role in planning, resource allocation, and task completion. It ensures that project milestones are met within designated timeframes, aids in progress tracking, risk management, and quality assurance, and facilitates communication with team members and stakeholders. By providing a visual representation of project timelines, scheduling fosters clear expectations, enhances accountability, and serves as a basis for decision-making. Moreover, it motivates team members by highlighting their accomplishments and contributes to the overall success of the project.

The Gannt chart, made on TeamGantt.com, shows the various steps required to complete the project on the left, as well as providing insights of their timeframes on the right. The chart was created at the commencement of the project. The arrangement of the Gannt chart showcases key milestones in the design process which assists project management.

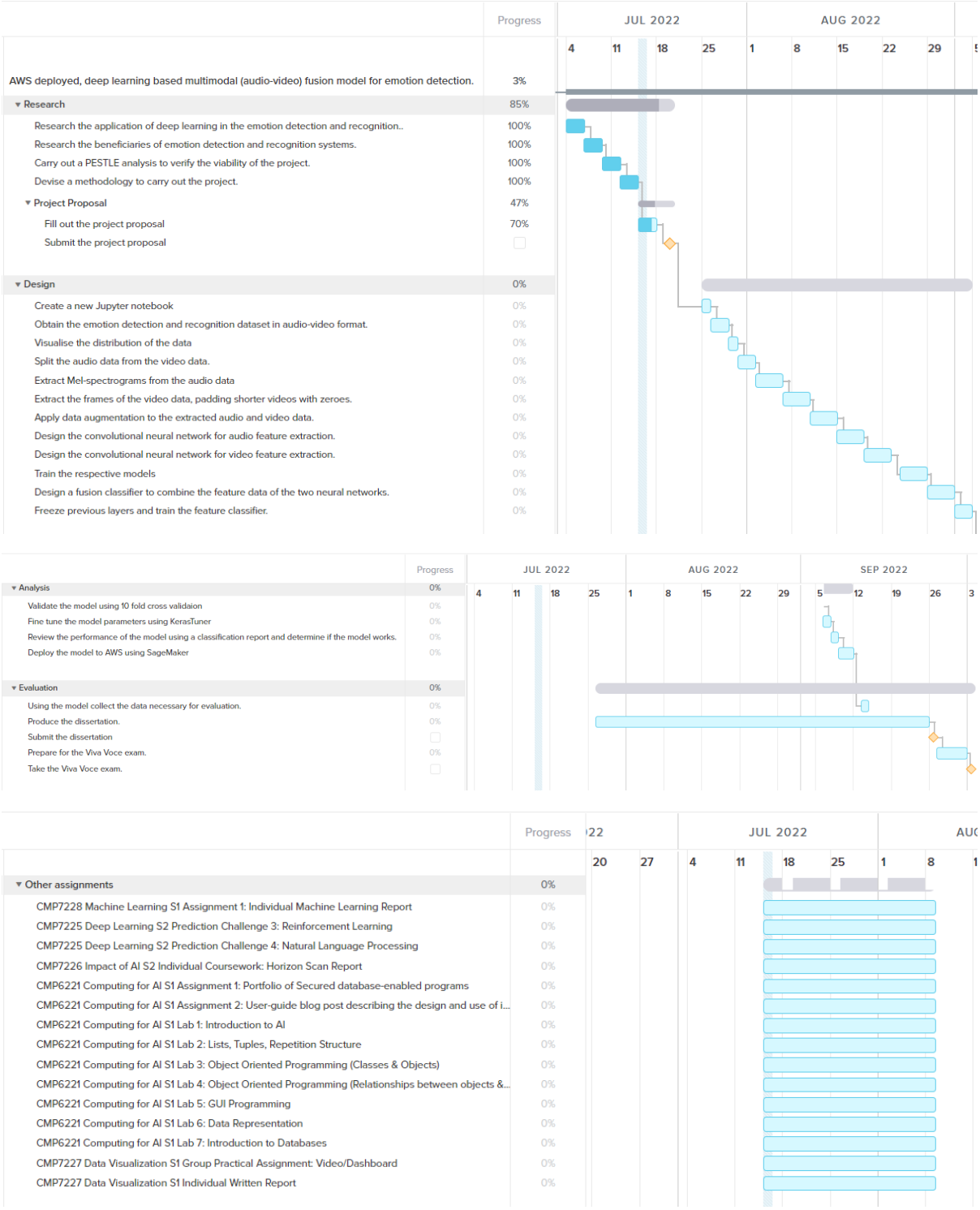

Figure 1. Screenshot of Gannt Chart for Project Planning (TeamGannt, 2023)

Chapter 2: Literature review

Like a map and torch provided to someone traversing abandoned caves, the literature review, as a research tool is paramount for organised guidance through the vast amounts of information that is studied because of model conceptualisation. A literature review is essential to make data driven decisions as it holds the respective data reserved for consideration. The outcomes of the literature review have a direct impact on the proposed model architecture. The literature review serves as a bridge between the known and the unknown, as we traverse through research paper after research paper, we return here to establish new knowledge and evaluate it using old knowledge. The chapter will focus on the tried and tested techniques, as well as experimental techniques. We will compare the pros and cons of model architectures, algorithms, traditional machine learning techniques. We will identify the state of the art in the domain of emotion detection and evaluate the improvements suggested by each group of researchers to conceptualize a model that is robust and efficient.

Many techniques have been evaluated for the domain of emotion detection, each suited to modalities and data sizes. Some high-performance models include:

Ensemble Models

Ensemble models, also known as fusion models, combine 2 or more algorithms to improve their accuracy and performance as well as their robustness. When combining the feature data of 2 or more modalities to pass to a single model for prediction generation it is known as early fusion. When the prediction data of 2 or more models are combined using numerical techniques such as averaging or voting, it is known as late fusion. Pre trained models are commonly used as part of ensemble models to reduce computational cost and training time.

Transfer Learning

This technique uses pre trained models to speed up model fitting and reduce computational load. There are many pre trained models available, in a wide range of architectures and parameters hence they can accommodate any computational performance requirements. Transfer learning involves fitting a pre trained model to a domain specific environment, for example, to emotion classes. The resultant model will be quick to learn the data sequence and provide results of high accuracy.

Support Vector Machines (SVMs)

SVMs have been widely used and praised for their ability to handle moderate amounts of data and their ease of interpretation in emotion detection. For instance, Yu et al. (2010) achieved an accuracy of 93.75% with an SVM-based speech model. However, SVMs struggle with complex emotional data such as facial expressions or audio signals, particularly when distinguishing between similar emotions like surprise and fear (Badrulhisham & Mangshor, 2021).

Convolutional Neural Networks (CNNs)

CNNs are powerful models for emotion detection from visual data, offering high accuracy rates. Badrulhisham & Mangshor (2021) reported CNN-based models achieving up to 90% accuracy. Despite their effectiveness, CNNs are computationally expensive to train and have fixed input shapes, limiting their flexibility in handling variations in data shapes.

Recurrent Neural Networks (RNNs) and Bidirectional Long Short-Term Memory Networks (BiLSTMs)

RNNs and BiLSTMs excel in capturing temporal dependencies in sequential data, making them suitable for tasks involving time-series emotion data such as speech or text analysis. Models incorporating BiLSTM layers have achieved remarkable accuracy rates, reaching up to 99.43% (Febrian et al., 2023). However, training these models with large datasets or complex architectures can be computationally intensive, and they may encounter issues such as vanishing or exploding gradients during training which can waste training time and computational resources.

Each of the strategies discussed for deep learning each have unique strengths and uses throughout a range of modalities as well as a range of datasets. As a result of implementation of the various neural network-based architectures, researchers continue to raise the bar in the affective abilities of emotion recognition technology.

2.1 Comparative analysis of machine learning techniques for emotion detection

From the early days for machine learning, traditional methods have been used to decipher sequences of image data. Although they were effective with the datasets before cloud computing and hardware advancement, the traditional methods prove to be computationally inefficient when working with large datasets, as well as having a lower resolution of prediction due to their shallow nature, which would cause them to struggle with emotions of strong similarity. The upside of such techniques is that the data is easily interpretable, due to fixed mathematical operations taking place, making the models safe and robust for the small to medium datasets they are designed for.

After computing power was more readily available deep learning algorithms were developed. These allow for automatic learning of hierarchical features, meaning the developer doesn't explicitly have to state what the model should be looking for or what relationships it should evaluate, in fact they no longer have to do feature engineering manually as long as the frames can be retrieved from the directory. The automatic nature meant more subtle patterns were captured resulting in an improvement in model accuracy. Deep learning algorithms require all features to be labelled, if there was a 30fps video for 5 seconds each video would have 150 steps with 150 labels which can easily translate to millions in a large dataset and therefore can become computationally expensive. The large feature set and label set is fed to the model which would store relationships for all the data thus increasing in size on each epoch of training. If not properly layered, neural networks can overfit data.

Recently even more computer power had come available with graphics card tensors being used for machine learning allowing larger models and more parameters to be used, further improving model accuracy. To reduce overfitting, ensemble models combine two or more models by concatenating the features and using a single combined model, known as early fusion, or

combining the predictions of each model using numerical techniques to provide an overall decision to the prediction of the combined model with the consideration of the individual modalities or features. As several models are maintained data complexity in increased thus requiring more storage and more processing power and capacity.

The comparative analysis shows an outline of the evolution of machine learning techniques, highlighting the strengths and weaknesses of each technique for emotion detection. The analysis allows researchers to understand the techniques thoroughly in order to decide which category of machine learning techniques are most appropriate for their data size and computing capabilities as the subtlety of changes within the data required to be captured.

2.2 Existing approaches in emotion detection using machine learning

In the mental health care environment, medical professionals must assess the patient's emotions every 15 minutes to 1 hour, depending on the risk level of the patient. Each observation would require several staff and the unattended time is always a calculated risk. In an educational environment the teacher would only observe each pupil when they raise their hand or are attended to. In a consumer environment a customer will see a product or advertisement and the staff will only see their sentiment if observing the customer, if they are called upon or if they purchase a product. Emotion detection models allow constant observation, allowing the client to act upon emergencies or diagnose patients sooner, or identify bullying in schools and keep tabs on the wellbeing of their students, or to catch a customer's first reaction when viewing a product or advertisement to allow for personalised sales strategies.

Yu et al. (2010), extracted Mel Frequency Cepstrum Coefficients, known as MFCCs and Mel Energy Spectrum Dynamic Coefficients, known as MEDCs from audio data sourced from the utterance of speech to train an SVM model to recognise emotion automatically, for use in the human-computer interaction field. The dataset used contained 406 sound files with 5 emotions: anger, sad, happy, neutral and fear. The model was trained using a Radial Basis Function and Polynomial kernel function and used LIBSVM to produce evaluation metrics which had an average score of 93.75% and 96.25%, respectively (Yu et al., 2010). Although a traditional model, with a small to medium size dataset the model performed exceptionally.

MobileNet is an ultra-lightweight convolutional neural network which strives in low performance environments, which was a good use case for the developers, who planned to use the model for human-computer interaction. Badrulhisham & Mangshor, (2021) downloaded the pre-trained model and then gave the model an open top with locked layers to add the input layer to specify the shape of the data. 1600 images were used with a 90:5:5 ratio split of train, test and validation data. 4 emotion classes were used, with labels: happy, sad, surprise, and disgusting. The model was evaluated using a confusion expression and scored an average accuracy of 92.50% (Badrulhisham & Mangshor, 2021). A benefit of the model was its ability to allow images as an input to the CNN, as well as its small size which was appropriate for mobile apps.

Yang et al., (2018) designed a model for emotion detection within a virtual learning environment, where teachers would be unable to speak to children about their wellbeing, allowing the school to ensure students are safe and enriched by their learning resources. The

JAFFE dataset was used and consisted of 213 images from 10 actors which shared 6 emotion classes: sadness, happiness, surprise, fear, anger, disgust. A Haar cascade classifier was used to crop the eyes and mouth to allow filter and edge detection as part of the feature extraction process and the coordinate data was fed to a neural network for training. The model had an average accuracy of 87.53%, with the lowest accuracy being the sad emotion, followed by disgust and fear (Yang et al., 2018).

2.3 Advancing emotion detection

Yu et al., (2010) recommended the tuning of kernel size to increase accuracy hence the variable could be added to KerasTuner when tuning the model (Yu et al., 2010). A highly accurate model may prove robust enough for deployment with some confidence tuning.

Badrulhisham & Mangshor, (2021) recommended combining their CNN model with another AI model to increase their accuracy. The model could be used for an ensemble model with speech data to provide a robust model.

Yang et al., (2018) proposed their emotion detection model should be combined with a method of biometric authentication in a way that integrates with human-computer interaction or HCI, equipment (Yang et al., 2018). If the recommended changes were implemented the model could log emotion data to the respective user profiles securely, providing a robust model for use in the virtual learning environment.

Febrian et al., (2023) created a model that used 8 convolutional layers with ELU activation, and which connected through a BiLSTM layer to a fully connected output layer with SoftMax activation to classify the 7 emotions: anger, contempt, fear, disgust, happy, sadness, surprise. The data was augmented within the script and with 100 epochs and a batch size of 32 the model achieved an excellent accuracy of 99.43%. The figure is a testament to the effectiveness of BiLSTM and CNN networks when compared to their independent forms (Febrian et al., 2023). Febrian et al., (2023) recommended to combine the BiLSTM with pre trained CNN models to further improve training speed and accuracy.

Through the project we aim to build a model that combines the findings of the research to build a robust and efficient model, however due to a lack of access to high performance computing the model may be adapted to build a proof of concept to allow researchers to determine the feasibility and effectiveness of the model before committing the time and resources for full development.

2.4 Improvements in image-based emotion detection using BiLSTMs

Many industries can benefit from the integration of BiLSTM based models. The detection of changes in emotional state using robust multimodal speech and video analysis models can facilitate the diagnosis of medical conditions such as depression and anxiety. Within interactive systems, the environment could be adapted to facilitate the user's mood for seamless personalisation. Businesses can gain valuable insights such as seasonal changes in preference, to adapt their products or services without being invasive with traditional techniques such as surveys. Natural language understanding systems such as ChatGPT also use BiLSTMs to understand and retain data to generate personalised responses. In an educational environment

emotional response could be logged during learning to provide personalised learning regardless of distance as well as providing an early intervention technique to prevent emotional distress.

A Bidirectional Long Short-Term Memory, or BiLSTM, like other Recurrent Neural Networks can handle sequences of varying lengths, essential to varying datasets. The algorithm processes sequences in both directions at the same time to thoroughly understand nuances in emotion. The cells on BiLSTMs extract meaningful features such as relevant landmark data and retain them over long sequences while discarding any irrelevant data for memory optimization using gates. In addition, BiLSTMs model temporal dependencies within the data so the model can learn long range dependencies for speech and image data sequences to aid the identification of emotions. Figure 2 illustrates the structure and flow of a BiLSTM cell.

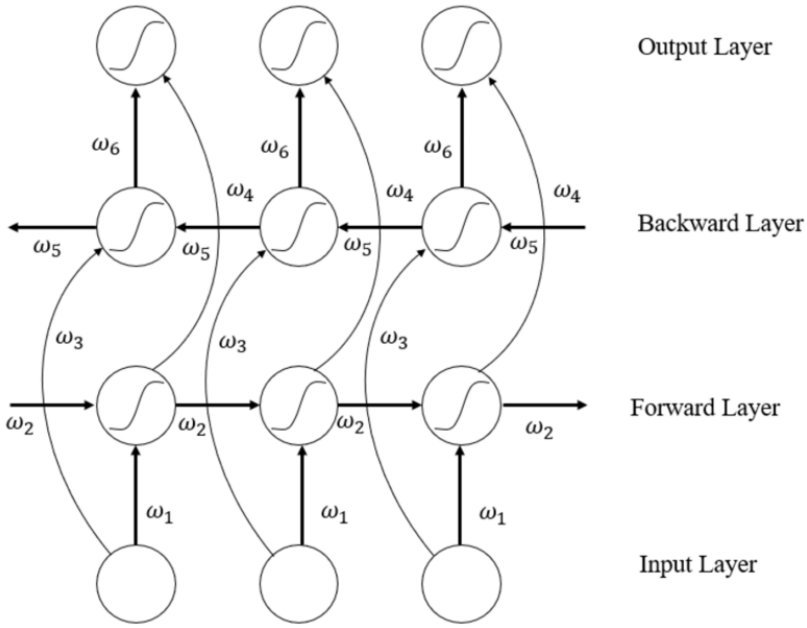

Figure 2: Diagram of BiLSTM Cell (Sun et al., 2020)

BiLSTMs are commonly used in state-of-the-art models for multimodal emotion detection to gain insights of the long-range dependencies across different modalities (Febrian et al., 2023).

Recently, Lazcano-Herrera et al., (2023) used BiLSTMs in combination with pre trained transfer learning models before fine tuning them using domain-specific data, EEG motor imagery, a form of physiological data and achieved an accuracy of 92.33%. The researchers' recommended paying the increased computational cost of adding augmented data to the model if the model's performance is paramount (Lazcano-Herrera et al., 2023). The researchers' dedication to the project has proven that it is possible to create a robust ensemble model, incorporating BiLSTMs and pre trained models.

Gaining further understanding of the powerful framework of BiLSTMs allows researchers to advance the deployment of effective and robust models into products and services of a diverse range of emotion analytics applications.

2.5 Improvements in deep learning for emotion detection

The advancement of deep learning has transformed affective computing, which means allowing models to process, interpret, simulate, and analyse human behaviour and emotions, better than ever before, using multimodal ensemble models.

Multimodal ensemble models combine different modalities, such as audio and video within the same script and can undergo early fusion at feature level, where the audio and video features are concatenated and fed into a model that incorporates both modalities, to obtain insights into temporal dependencies, or late fusion at decision level, where 2 separate models are run for audio and video and their outputs are joined using averaging or voting, where the model with the most predictions for a class, is permitted to pass their data. An example of this is if an audio model is 60% sure it's a sad emotion but the video model is 80% sure its angry, the vote would be won by the video model and its prediction will be passed into the model for that sequence.

Deep learning models can extract patterns of high complexity directly using raw data. This approach enables such models to recognise emotions, accounting for nuances and using temporal awareness. At the time of writing deep learning techniques were the state-of-the-art approach to extracting emotion data. The use of pre trained models and attention mechanisms has transformed the effectiveness of emotion classification across all modalities.

Pre trained models have been a major contribution to the conceptualisation phase of model development. With their high accuracy and vast parameter options, there's an optimal pre trained model for any deep learning task. Pre trained models are loaded and are used in ensemble with BiLSTMs to keep track of nuances with temporal dependencies, as well as pooling layers for down sampling to optimize model size during training with an output layer with units equal to the number of emotion classes. The approach significantly reduces the computational cost and training time when compared to an equivalent, non-trained model.

Lazcano-Herrera et al. (2023) demonstrated the effectiveness of BiLSTMs in conjunction with pre-trained transfer learning models to classify emotions and following fine tuning and achieved an accuracy of 92.33%. The exceptional performance reflects the early potential of ensemble techniques using BiLSTMs with pre trained CNN models.

Fine tuning a pre-built model to data specific to the emotion domain is an example of transfer learning, as the pre-built model was originally trained on vast amounts of data, but the weights of that training were saved, and the learning was transferred to a new domain.

Using the forget function, BiLSTMs discard irrelevant data, so the model can focus on relevant parts of the sequence. Attention mechanisms can be integrated into deep learning models to further focus on relevant parts of the sequence and to disregard more irrelevant information.

Attention mechanisms can further optimise the computational cost and training time of emotion classification models, as well as improving the clarity of nuances within the data by reducing noise, which key to identifying emotions accurately.

Attention mechanisms in deep learning models allow the model to dynamically focus on different parts of the input sequence, with the ability to assign different weights to each sequence element. Increasing the weight on elements within a sequence biases the models' feature extraction towards the selected elements. There are 3 types of attention mechanisms,

additive, multiplicative and self-attention. Additive attention applies a feedforward network to the current decoder, which handles the input of the feature data and all encoder hidden states, to identify long range dependencies between the raw data and the generated outputs. Content-based attention takes the dot product of the current decoder and all encoder hidden states and exaggerates similarities between the states highlighting the most relevant input sequences. Self-attention also exists but is out of the scope of the project. The context vector of an attention mechanism contains the weighted sum of the elements of the input sequence and is used by the model to prioritise relevant areas for training. When used in combination with pre-trained models and ensemble configurations, attention mechanisms allow for the development of robust and efficient models that can combine various modalities to provide features with prevalent nuances and low noise resulting in more accurate predictions for emotion detection across diverse domains.

Finally, there is distributed computing clusters, which are computing environments within a server that can be rented from cloud computing service providers such as Azure, Google Cloud Platform and AWS. The free versions are less powerful than a mid-range computer, although the paid versions can offer the most powerful computing environments in the world but the computation cost for using these models is significant. The clusters vary in their virtual random-access memory, known as vRAM, size and number of cores by varying the amount available for use. Cloud computing can prove highly effective at training large scale models at high speed, perfect for ensemble techniques such as multimodal emotion detection models.

2.6 Improved techniques for ensemble models in emotion detection

To improve the proposed ensemble model, attention mechanisms were added to the concept design alongside the pre trained CNN, conceptualised to be SqueezeNet due to its flexibility in performance requirements and its success when used by Lazcano-Herrera et al., (2023), which will be connected to the BiLSTM which will connect to the fully connected layer for emotion classification, similarly to the model of the researchers.

As an improvement to the current models, the proposed model featured multimodal, audio and video, feature extraction to catch nuances more effectively. The combined feature data will be the input shape to the pre trained model and a sequence will be produced and passed to the BiLSTM with ELU activation which will use addition attention mechanisms to focus on the nuance data to identify emotional cues more effectively. The output layer will use SoftMax activation and be the same number of channels as the emotions within the chosen dataset.

KerasTuner can be used to try a customizable range of parameter combinations on the model, to optimize the fitment and accuracy of the model without completing a full training sequence. The tuner can tune the parameters of the BiLSTM and attention mechanisms while the pre trained CNN will be frozen thus non modifiable.

Lazcano-Herrera et al., (2023) recommended paying the additional computational costs to achieve the best performance by applying data augmentation techniques to the data. Data augmentation techniques can include horizontal or vertical flips, rotations, stretching or cropping as well as the application of filters such as blur. The use of such techniques is paramount to creating robust models, that can function as well in the real world as in the testing

phase. When large datasets are used, memory consumption can become a concern when augmenting data. An example of a large dataset is the Ryerson Audio-Visual Database of Emotional Speech and Song (RAVDESS), which is 25.6 gigabytes in its compressed form. Assuming a size of 30gb, if 5 augmentations were carried out for each file, the model would use 150gb for each epoch of training if incorporating BiLSTMs when the full sequence length for the maximum ability to find the temporal dependencies.

The use of a face mesh within the feature extraction loop helps to align landmarks in a consistent position. When video files are cropped using a bounding box, the bounding box is placed correctly because a face tracking function tracks the centre of the face, using a circle, ensuring the landmark detection can always extract features from a face. Once the face mesh is initialised the feature extraction loop collects the coordinates for each frame which are stored as a list in a list for their respective files along with their label data

The audio data extracted as MFCCs and concatenated with the video data maintains temporal dependencies. The combined data is passed to the ensemble model to generate predictions.

The combination of the discussed techniques forms a novel model structure which will be used to perform multimodal emotion detection.

Creating attention – based models using multimodal ensemble techniques is found to be the most effective method despite its challenges of data scarcity, computational cost and fusion methods. A BiLSTM transfer learning model using ensemble techniques to combine audio and video data at feature level, proves to be the most effective technique for a robust emotion recognition system with low complexity and computational cost. The comprehensive comparison of machine learning techniques highlights the pros and cons of traditional and modern approaches to emotion detection algorithm selection, which will aid researchers to make informed decisions with consideration for the bottlenecks of each method.

2.7 Different approaches applied previously for multimodal processing

Some alternative approaches used for image processing include k means clustering, where the data points are grouped together, and their centroid tracked across the coordinate space to evaluate nuances within the sequence by tracking the Euclidian distance between data points at each frame. The nuances once identified, can translate to emotional cues.

Directly passing the image into the CNN is another technique that is commonly used for image processing, eliminating the need for an initial feature extraction loop for video data.

Audio can be extracted for MFCCs, spectrograms, Mel spectrograms, chroma, spectral centroid and contrast, each feature providing deeper definition of the changes in pitch and timbre within the audio data. As audio data is sequential, the extracted feature data can be passed into a BiLSTM or other RNN to generate predictions.

If a late fusion ensemble is employed, separate audio and video models must be created and then their predictions combined using averaging or voting.

Dhall et al., (2023) carried out a project which used audio and video data from the wild for a Google challenge to define emotions as positive, neutral or negative. The video data was stored

in a dataset that was used to train InceptionV3, a pre trained CNN to generate predictions. The audio data was extracted using the OpenSMILE toolkit and a dense model which used the input shape of the audio data was trained to generate predictions. The predictions were combined although the journal did not specify the technique used. A validation accuracy of 47.88% was achieved which proved to be poor, meaning that just under half of the predictions were incorrect (Dhall et al., 2023). Late fusion fails to capture the temporal dependencies present in the combined audio and video data. Furthermore, the processing of audio data was not synchronized to the processing of video frames which would lead to poor alignment of the predictions to the data as well as a shape mismatch.

Ghaleb et al., (2022) created a model that used a set of encoders called MATER. They employed a transformer-based approach to encode the audio and video data into feature data and then generate predictions using the VGG model. The predictions from each modality were joined using the averaging method which provided a 67.2% accuracy for the CREMA-D dataset (Ghaleb et al., 2022). Although the model did not achieve a high accuracy, it provided more correct predictions than false predictions, unlike the model by Dhall et al., (2023). The MATER model represents an alternative approach to multimodal feature extraction, which was proven to be highly adaptable, which was an admirable technique.

2.8 Machine learning algorithms applied previously to emotion detection

Extensive feature engineering would have to be carried out to apply a dataset to a traditional machine learning algorithm, while using deep neural networks can negate such issues through due to their adjustable input shape sizes. Compared to traditional machine learning algorithms, CNNs store a larger part of the audio or video sequence during training hence have a higher chance of finding long range dependencies within the data, which is proven by the accuracy of CNN models when compared to traditional machine learning techniques such as SVM. In addition, with the size of modern datasets it would not be computationally efficient to run such a large dataset without some form of neural network structure.

Ghaleb et al., (2022) created a model that used encoders to transform the input files. Once the sequences were encoded by a pair of encoders named audio encoder and video encoder, respectively, the encoded features were passed through a VGG convolutional neural network to generate predictions for the respective models. The audio predictions and video predictions were combined using averaging to provide the final predictions. The architecture used was named MATER. The researchers employed a transformer-based approach, an approach which is not commonly used unless in large models. It was discovered that transformer-based models share the flexible input size of RNNs although RNNs can't dynamically adjust input shape size like the transformer-based model can. The predictions from each modality were joined using the averaging method which provided a 76.3% accuracy (Ghaleb et al., 2022) for the RAVDESS dataset (Livingstone & Russo, 2018), a collection of 7356 of audio and video files where 50% of the video files need to be ignored to prevent duplicates. Another benefit of the transformer models is their ability to train each modality individually, allowing audio only, video only and full AV files to be added with no prior adjustments to the model once configured.

Chapter 3: Methodology

Methodology concerns the principles and methods of research. Designing a methodology for the project helps to maintain consistency in the illustration of outcomes as well as defining the evaluation metric to be used for models and data.

In I.T, researchers follow an agile process when developing software products therefore the methodology will also follow the agile process. The agile process focuses on the iterability of software products, the process is outlined in order: Plan, Design, Develop, Test, Deploy, Review. Only after successful review of the deployment of a product can it be launched; unsuccessful reviews trigger another iteration of planning ensuring software robustness upon launch.

An Agile methodology for the multimodal emotion detection model was implemented.

At the planning stage, the project objectives were defined and the emotions to be detected were identified using the metadata of the RAVDESS dataset. It was made a priority to incorporate the dataset and extract its features into the model script.

The design stage consisted of the conceptualization of the multimodal emotion detection model. It was made a priority to perform deep learning architecture and algorithm selection for the generation of emotion predictions which used the concatenated features of the extracted audio and video data as an input.

In the development stage the implementation of the model took place. It was made a priority to develop a model that used an early fusion ensemble neural network architecture, consisting of the pre-trained MobileNet transfer learning model prepared for the concatenated feature data as an input and had output its processed data to 2 GlobalPooling3D layers to reduce dimensionality, which output to the BiLSTM which saved relevant feature data in order to capture long range dependencies extracted from temporal dependencies within the data. Once implemented, the model was trained validated and tested to generate predictions in the form of emotion labels which were compared with t - and to the feature data. The approach was optimized for low performance learning to enable its use in performance constricted environments, such as within mobile phone apps.

In the testing stage, the model was further evaluated using the validation data to return performance metrics such as validation_accuracy, classification_report and confusion matrices and once satisfied, the test set is run to confirm successful generalisation across a variety of context.

Deployment involved the integration of the multimodal emotion detection model into real world software systems once performance criteria are met, so the input data could be analysed to provide live emotion recognition.

The review stage consisted of feedback collection from users and stakeholders, in order to evaluate the effectiveness of the multimodal emotion detection model in many scenarios, which allowed for further refinement of the model to improve its performance, the parameters of which would be added to the planning stage for the next iteration, if the model is not launched, to represent continued adaptation of the model to the requirements of emotion detection models.

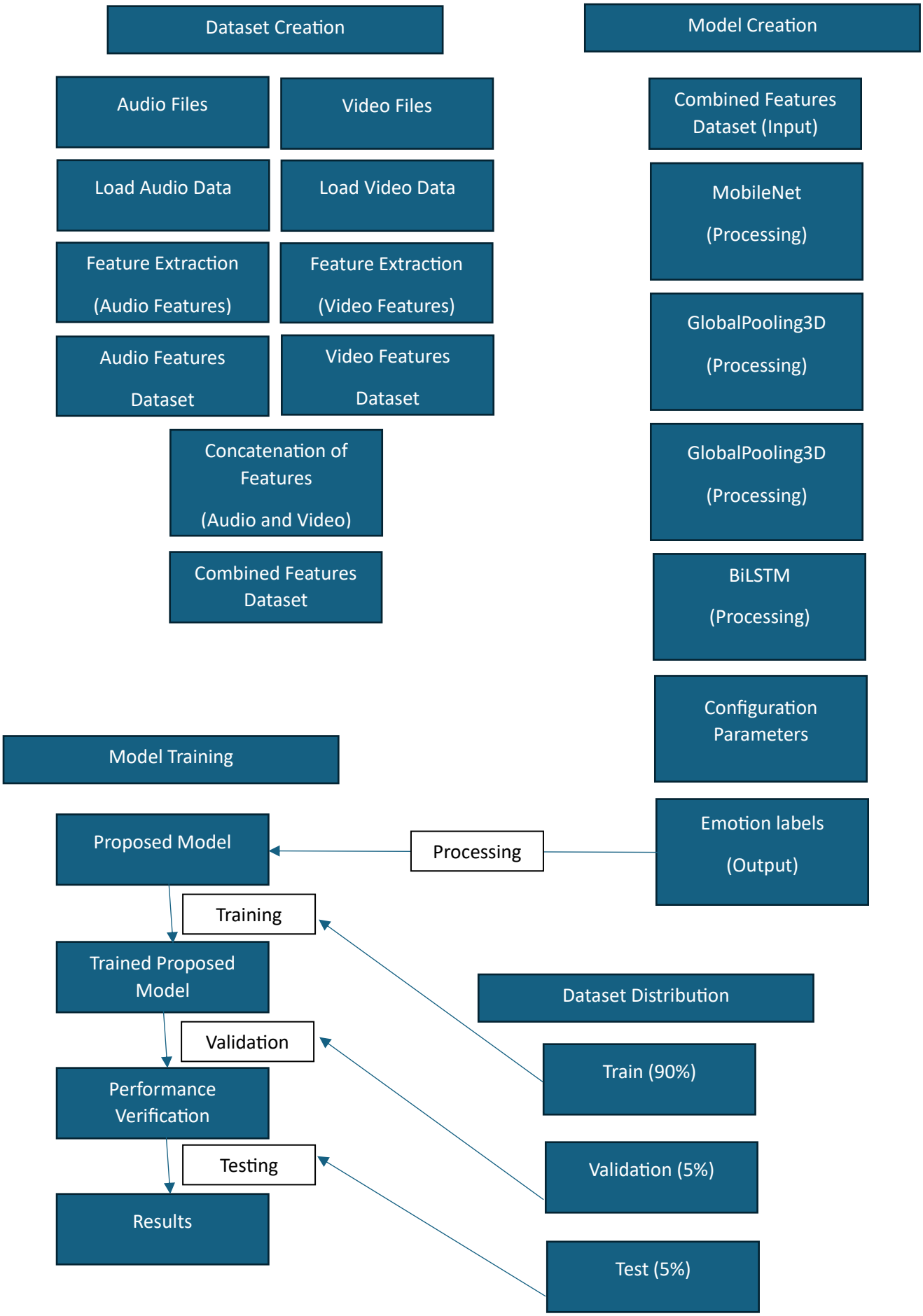
Dataset Creation
Audio Files
Video Files
Load Audio Data
Load Video Data
Feature Extraction (Audio Features)
Feature Extraction (Video Features)
Audio Features Dataset
Video Features Dataset
Concatenation of Features (Audio and Video)
Combined Features Dataset
Model Creation
Combined Features Dataset (Input)
MobileNet (Processing)
GlobalPooling3D (Processing)
GlobalPooling3D (Processing)
BiLSTM (Processing)
Configuration Parameters
Emotion labels (Output)
Processing
Model Training
Proposed Model
Training
Trained Proposed Model
Validation
Performance Verification
Testing
Results
Dataset Distribution
Train (90%)
Validation (5%)
Test (5%)

The representations made on the previous page outline the 4 stages responsible for functioning of the multimodal emotion detection model: Dataset Creation, Model Creation, Model Training, Dataset Distribution.

3.1 Data Collection

When the multimodal emotion detection model is developed, it is crucial to consider the potential use cases, such as patient monitoring in healthcare, student monitoring in virtual classrooms and customer satisfaction monitoring for business. The roles carry great responsibility, safeguarding the wellbeing of mental health care patients, general health care patients, students and customers and responding to their emotions as per the end user specifications.

To effectively fulfil the responsibilities the multimodal emotion detection model it is imperative to debug any issues arising from the lack of robustness or integrity of the model that could pose safeguarding hazards from false detection or omissions. Compensating for that, large, emotionally diverse and high-quality datasets will be sourced to train the multimodal ensemble model, as the CNN component requires vast feature data to generalise effectively to provide accurate emotion predictions. Accurate data collection ensures the establishment of a solid foundation for model implementation.

The dataset was meticulously selected following the comparison of 10 datasets. The comparison criteria and considerations are highlighted below, followed by the comparison table.

Data type

For a multimodal model, the dataset had to feature audio-visual data.

Complexity

The data required a medium complexity. This was due to the limitations of available technology. A low complexity dataset would also work although there would be scalability concerns due to the lack of diversity within the dataset.

Emotional diversity

A high emotional diversity will lead to a complex model with a high computational cost, while an emotion diversity that is too low will produce an oversimplified model with low accuracy when presented with a range of emotions.

Cultural diversity

There may be nuances among cultures in the way they convey emotion, whether by expression or by sound. Too little cultural diversity will result in a model with a small range of applications, within a fixed geographical location, while a large cultural diversity will produce a model which can be used for a wider geographical range. Emotion does not have a language, rather audio cues such as pitch shifts and volume and visual cues such as forehead wrinkles, eyebrow expression and mouth expression. Therefore, given a culturally diverse dataset, the model would be compatible regardless of the spoken language.

Demographic diversity

People from different age groups, genders and income levels may express emotions in different ways, using different accents or facial expressions. People of different races may use stronger or lighter expressions than their counterparts which makes it difficult to generalise a model using data with a small demographic diversity. People with psychiatric disorders such as autism and down's syndrome may express their emotions differently to those without psychiatric disorders and could be misread by a model that did not consider this factor as part of its training data.

Dataset licensing

It is important to consider whether the licensing of the dataset allows for it to be used for research purposes. Some datasets require contacting the author for access to the files, for example the DEAP dataset, while others can only be used once purchased. The licensing restrictions can potentially limit the number of datasets available for use.

Dataset	Description	Data type	Complexity	Emotional diversity	Cultural diversity	Demographic diversity	Dataset licensing
AffectNet (Mollahosseini et al., 2017)	AffectNet contains over a million facial images annotated with seven emotion categories.	Image	Medium to High	Seven basic emotions (e.g., happiness, anger, sadness)	International, but primarily Western-centric	Limited demographic information	By academic request only, test set not released
EmoReact (Nojavanasghari et al., 2016)	EmoReact is a collection of images extracted from Instagram, labeled with various emotional reactions.	Image	Low to Medium	Broad spectrum of emotions expressed	Global, reflecting diverse user profiles	Children aged 4 to 14	By academic request only
EmoReact (Audio) (Nojavanasghari et al., 2016)	This subset of EmoReact focuses on audio clips, capturing diverse emotional reactions.	Audio	Low to Medium	Broad spectrum of emotions in audio format	Global, reflecting diverse user profiles	Children aged 4 to 14	By academic request only

RAVDESS (Livingstone & Russo, 2018)	The Ryerson Audio-Visual Database of Emotional Speech and Song (RAVDESS) provides audiovisual recordings of actors expressing various emotions through speech and music.	Audio, audio-video, video	Medium	Eight emotional states, including neutral	Actors from North America	12 male and 12 female actors	Creative Commons license, available free via Zenodo
IEMOCAP (Busso et al., 2008)	The Interactive Emotional Dyadic Motion Capture (IEMOCAP) dataset contains audio and video recordings of scripted dialogs with emotional content.	Audio-video	High	Multiple emotions, natural conversational context	Actors from North America	5 male and 5 female actors	By academic request only

MELD (Poria et al., 2019)	The Multimodal EmotionLines Dataset (MELD) is an extension of the EmotionLines dataset with modalities collected from the "Friends" TV show	Audio, video, text	High	Complex emotional scenarios	Actors from North America	Male and Female, aged 20 to 30	Copyleft license, available free via GitHub
SAVEE (Jackson & ul Haq, 2011)	The Surrey Audio-Visual Expressed Emotion (SAVEE) dataset includes audio and video recordings of actors expressing different emotions.	Audio, video	Low to Medium	Four primary emotions (happiness, anger, sadness, neutral)	British English speakers	4 males aged 27 to 31	By academic request only

SEMAINE (McKeown et al., 2011)	The SEMAINE database offers audio-visual recordings of natural conversations with emotional content.	Audio, video, image	High	Natural emotions in conversational context	European participants	Limited demographic information	By academic request only
DEAP (Fortin et al., 2012)	The DEAP dataset provides EEG, physiological, and video data for emotion recognition.	Audio, video, physiological	High	Emotional states are measured using multiple modalities	Participants from various countries	Age and gender information available	By academic request only
CREMA-D (Cao et al., 2014)	The CREMA-D dataset provides audio-visual recordings of actors expressing different emotions.	Audio, video	High	6 emotional states measured.	Participants from various countries	48 male and 43 female actors aged between 20 and 74	Open database license, available via GitHub

Table 1: Comparison of datasets used for emotion classification.

From the datasets considered, the most readily available datasets were MELD and RAVDESS and CREMA-D due to their open licenses. Moreover, the MELD and RAVDESS datasets used actors from North America, although due to the novelty of emotion detection datasets, there were few readily available datasets that had a lot of cultural diversity, at the time of writing.

The lack of cultural diversity within training data for emotion detection poses issues within diverse demographic representations. Models that used facial recognition technology, for example, to identify criminals, showed a strong racial disparity, caused by poor generalization which caused numerous false arrests on BAME individuals (Johnson et al., 2022). The poor generalization and accuracy can be put down to nuances within cultural diversities that were not captured during training because of a lack of culturally diverse training data.

After research, we experienced the lack of cultural diversity issue firsthand. Unfortunately, there were few available datasets with the required level of cultural diversity. While DEAP, a dataset that used physiological signals including EEG rather than traditional audio and image features, to capture reactions to videos for emotion detection, was only available by special request from the researcher. The DEAP dataset provided a novel approach to emotion detection with a variety of use cases, from smart wearables to healthcare (Fortin et al., 2012). Although the data was not obtainable, if it was obtained, the signals would have been integrated the multimodal model to increase the diversity of its input modalities and expand its potential applications. The use of physiological data can improve generalization by negating the limitations of cultural diversity as physiological data is consistent along cultures. Requiring only gender and age diversity, more robust modelling techniques can be implemented when compared to face detection methods.

The MELD dataset was derived from the US television show, Friends, which was first aired in 1994. As a result, many of the portrayed emotions were exaggerated and unlikely to be expressed similarly in reality. In addition, gestures used in the 1990's are unlikely to have remained prevalent over 30 years later, which significantly affected the suitability of the MELD dataset as part of the project (Poria et al., 2019).

CREMA-D or Crowd-sourced emotional Multimodal Actors Dataset provided the desired level of complexity. The dataset displayed strong cultural diversity, with 91 actors from various countries aged 20 to 74, contributing to the increased the demographic diversity of the feature data. CREMA-D used 6 emotions for its label data. The CREMA-D dataset contained 7442 files with a manageable combined compressed size on 7.55 gigabytes. The data was split equally as mp3 files, wav files and flv files with sound (Cao et al., 2014). The use of a culturally diverse dataset improves model generalization during training, resulting in a robust model with more accurate predictions.

Due to its high complexity, the next closest model by complexity was found to be the RAVDESS dataset, or Ryerson Audio-Visual Database of emotional speech and Song, which while providing no cultural diversity, with 24 North American actors, its reduced complexity allowed for reduced computational cost because of rapid conceptualization of the model architecture. Reduced complexity translates to a reduced number of parameters required to achieve fitting thus reduced training time. Acquired [20/02/2023], the RAVDESS dataset contained 7356 files with a manageable combined compressed file size of 25.6 gigabytes. The data was split equally as wav files and mp4 files, where half of the mp4 files are without audio,

which allowed for more efficient file processing as the data splitting step to separate audio from video data, was not required (Livingstone & Russo, 2018).

For example, a filename '01-02-01-01-01-01-17.mp4' decoded as follows:

Modality: 01 (speech video)

Emotion: 02 (calm)

Intensity: 01 (normal)

Statement: 01 (Kids are talking by the door)

Repetition: 01 (1st repetition)

Actor number: 17

Gender: Male

To ensure the integrity of data, preventing duplicates, all naming variables excluding the modality, were extracted and stored in a data frame for label data and later analysis. To prevent duplicates, the modality was fixed when the data was obtained.

The modality required for audio data was “03” and for video only was “02”. Their extensions were “.wav” and “.mp4”, respectively.

Python’s glob module and the os.path module were used to load audio and video files from the RAVDESS dataset.

the os.path.join() function was used set a filepath in combination with the wildcard “**” to recursively search within the directory.

The glob.glob() function is used to generate a list of file paths within the specifications of the audio and video patterns.

Finally the extracted list of filenames for audio and video data is parsed using the emotion code list to create lists of emotion labels for the lists of filenames.

The Python code snippet for data collection is shown below:

```
# Define patterns for audio and video files
audio_pattern = os.path.join(root_dir, "**", "03-*.wav")
video_pattern = os.path.join(root_dir, "**", "02-*.mp4")

# Find audio files recursively
audio_files = glob.glob(audio_pattern, recursive=True)

# Find video files recursively
video_files = glob.glob(video_pattern, recursive=True)

# Generate labels for audio files
audio_labels = [parse_emotion_label(os.path.basename(file_name)) for file_name in audio_files]

# Generate labels for video files
video_labels = [parse_emotion_label(os.path.basename(file_name)) for file_name in video_files]
```

The code snippet efficiently retrieves the required filenames for each modality along with their corresponding emotion labels, preparing the data for the use of preprocessing techniques.

3.2 Data preprocessing

Data preprocessing comprises the techniques used to clean and prepare the raw data for effective training. Unless the raw data is directly input to the model, the files can be checked for duplicates, resized to reduce dimensionality which increases the computational efficiency of the model.

The label data was encoded to integer variables from its parsed string variables, to ensure reliable data manipulation. The label data was then one hot encoded using the to_categorical function from the Keras utils library to ensure the model does not incorrectly identify an emotion with a higher number as more important, which enables the implementation of a robust label data structure for reliable development and analysis of the multimodal emotion detection model.

Video preprocessing

To preprocess the video data, for facial landmark based emotion detection, the VideoCapture() function from the cv2 library was used to extract the video frames from each file

Face mesh

From the MediaPipe library, a 3D face mesh function was initialized to be used as reference points for the facial landmark data, so the shape of the landmark data remains consistent, a crucial requirement to allow for strong generalisation across the training and analysis of the model. Having too many data points can unnecessarily increase the complexity of the model, wasting computational resources. MediaPipe tools require RGB input so filters were not applied.

Downscaling

The original resolution of the video data was 1280 x 720 pixels, which was far larger than required, which would further contribute to the unnecessary complexity of the model training and analysis. To mitigate the risk of inefficient model training, the extracted video frames were downscaled by a factor of 4 ((1280 x 720)/4) to 320 x 180 pixels by using the ReSize() function from the cv2 library, effectively reducing the complexity of the data by the same factor. The technique reduces the dimension space of the video feature data, which helps to prevent overfitting.

Bounding boxes, cropping and landmark extraction

Furthermore, a bounding box was created for each frame with reference to the centre of the detected face, which ensured the face was always tracked by the bounding box. The dimensions of the bounding box were set to 128 x 128 pixels to crop out unnecessary data points out of the bounds of the face mesh, which reduced the number of data points in the downscaled video frames by an additional factor of 3.74 ((320*180)/(128*128)), while maintaining a consistent data shape across the dataset. As the face mesh could not be dynamically applied to the face with a fixed size bounding box, the mesh was initialized on the downscaled video frames and landmarks were saved to a list at the 468 points annotated by the mesh, for each video frame. The label data was adapted to provide a label for each frame in each video, as required by the multimodal emotion detection model. The stored landmark coordinate values were cropped within the limits of the coordinate points used for the positioning of the bounding box, which

allowed for a mesh that moved with the bounding box and used common reference points for all detected faces. The variation in distance between the facial landmark points throughout a video can provide key information for the identification of emotional cues.

Visualisation of video feature extraction.

The progress of data preprocessing was visualised during preprocessing using the imshow() function of cv2 to display the landmark data with reference to each video frame, which allowed for a manual quality inspection of the video data. Facial landmarks allow the model to capture subtle nuance in expression, which are key to detecting changes in emotional state.

Audio preprocessing

The audio data preprocessing was executed with reference to the video frames, where observation steps in the audio data were temporally aligned with the observation steps of the video data, which was fixed by the video frame rate of 30 frames per second. The sampling rate of the audio was found to be lower than the video frame rate so the preemphasis() function of the librosa library was used to raise the sampling rate by a factor of 3.

MFCCs

Initially MFCCs were planned as a single effective technique for audio feature extraction. However, as an effort to reduce the noise of relevant nuances that may support the detection of emotional cues, contrast, chroma and spectral centroid were also calculated. All techniques were sourced from the librosa library. Also known as Mel-Frequency Cepstral Coefficients, MFCCs use a similar range of frequencies to human hearing to represent the short-term power spectrum of sound. Humans use variations in the short-term power spectrums of their sounds to express emotional cues. For example, the sudden change in pitch caused by emotions of surprise or fear. n_mfccs adjusted the number of output coefficients produced by the function. While many more frequency bands were analysed, higher order coefficients were averaged to reduce noise and optimise data complexity.

Contrast

Contrast was responsible for amplitude analysis which allowed for emotional cues caused by changes in loudness to be captured, essential to provide insights to the properties of the emotions portrayed. f_min adjusted the contrast technique to only capture insights within audio data above 20 Hz, within the range of human hearing, while removing unnecessary data and increasing the quality of the technique. n_bands also tuned the contrast technique, allowing developers to change the number of frequency bands between which the spectral energy is evaluated, to adjust the resolution of the data provided.

Chroma

Chroma effectively captures pitch variations within audio data disregarding any frequency variation, allowing for pitch focused nuances to be recorded which are crucial to represent emotions like surprise, happiness, fear and anger,

Spectral centroid

Finally, spectral centroid averages the frequencies prevalent within audio data to assess the brightness of the sample which provided another channel of feature extraction for the audio

data. The spectral centroid can provide clearer insights on the intensity of the emotions portrayed as they are usually complemented by changes in brightness.

Finally, the lists of extracted audio features were converted to NumPy arrays and concatenated to provide a single output for audio feature data and then the emotion labels were extracted from filenames to form a list of audio labels.

Data splitting

The data was split using the train_test_split() function from the sklearn library to a ratio of 90:5:5 for training, validation and test features and label data. A split of 6:2:2 was experimentally proven to be more effective with traditional machine learning techniques than with CNNs.

3.3 Model architecture

A transfer learning ensemble structure was chosen for the development of the multimodal emotion detection model. Lazcano-Herrera et al., (2023) combined a convolutional neural network (CNN) with bidirectional long-short term memory (BiLSTM) units for the purpose of image classification and achieved an accuracy of 92.33%. The multimodal emotion detection model used a similar ensemble in combination with GlobalPooling3D layers for dimensionality reduction, although the input shape had changed for our model, which contained the extracted audio feature data and label set.

As mentioned by Lazcano-Herrera et al., (2023), it was worth paying the additional computational cost of data augmentation to increase model robustness and efficacy. Data augmentation techniques involve applying diverse filters and transformations such as noise, rotations and colour and contrast to features in order to increase the size of the dataset without obtaining additional data. With the option of random selection for data augmentation, the techniques boost the diversity of the dataset, which in turn increase the generalization ability of the resultant model, improving the accuracy of the model. Augmentations can be computationally expensive for large datasets and in our multimodal emotion detection model, the computing hardware lacked the memory to apply such techniques, hence it was omitted for the development of the base model, at the expense of reducing the generalization ability of the model,

The multimodal ensemble emotion detection base model, inspired by the architecture of the model evaluated by Lazcano-Herrera et al., (2023) combined the ability of convolutional neural networks to train using large datasets with the ability of bidirectional long short term cells to draw insights from sequences of data using long term dependencies. The model architecture was outlined in the code snippet.

```
# Define the model

model = Sequential()


# Add MobileNet base with customizable top layer

mobilenet_base = MobileNet(input_shape=(224, 224, 5), include_top=False, weights='imagenet')

for layer in mobilenet_base.layers:

    layer.trainable = False  # Freeze MobileNet layers

model.add(mobilenet_base)


# Add 2 GlobalAveragePooling3D layers with ELU activation

model.add(GlobalAveragePooling3D())

model.add(Activation(elu))

model.add(GlobalAveragePooling3D())

model.add(Activation(elu))


# Add Bidirectional LSTM layer with ELU activation

model.add(Bidirectional(LSTM(64, activation=elu, return_sequences=True,
kernel_regularizer=regularizers.l2(0.01))))


# Add Dense layer with 8 output units and softmax activation

model.add(Dense(8, activation='softmax'))


# Compile the model

model.compile(optimizer='adam', loss='categorical_crossentropy', metrics=['val_accuracy'])
```

The model used a variable input top layer to specify the shape of the multimodal feature set by setting include_top to “False” to allow customisation of the top layer of the pre trained model while preserving the model weights. The pre trained model used for transfer learning was MobileNet, which was selected for its smaller parameter set and fast training ability for design of the base model. The 2 GlobalPooling3D layers were incorporated with exponential linear unit (ELU) activation to reduce dimensionality and raise the diversity of the data. A BiLSTM layer was next, with 64 units, ELU activation and return sequences set to true to enable the algorithm to identify long range dependencies within sequences. Kernel regularization is applied to prevent overfitting and encourage the learning of simple patterns in the data. Negating the use of a fully connected layer allowed the model to learn sequential data which improved the robustness of the model. Finally, the output layer was assembled with 8 classes representing the emotion states in the RAVDESS dataset and softmax was chosen as the optimal activation for the several classes encountered in the output.

During compilation, Adam was selected as the optimizer to automatically adjust the learning rate while categorical_crossentropy was best suited to calculate the loss for data with multiple

classes. The performance metric used was validation accuracy as it provides a robust result while accuracy can be biased from multiple epochs of training.

3.4 Model evaluation and visualization

Model evaluation allows the objective measurement of model performance through the use of evaluation metrics like validation accuracy and classification reports, allowing developers to quantify the prediction abilities of the model. Visualising the training and validation accuracy and losses during development can provide insights to the robustness of the model, allowing early identification of potential risks such as exploding gradients, to the efficacy of the model.

In addition, the performance of various models and their respective components can be compared to obtain insights specific to the multimodal emotion detection model. The comparison of different architectures and parameters is key to finding an optimal configuration for the final revision of the model. Alternatively automated hyperparameter tuning can be implemented to compare and evaluate parameters so the developer doesn't have to. As well as the reduction in training time as a result of less reconfiguration, greater accuracy can be achieved using automated tuning as the increments of the parameters can be tuned very finely and evaluated over vast combinations. The use of confusion matrices allows developers to visualize the outcomes to gain a deeper understanding of the issues faced.

In the multimodal emotion detection model, performance was evaluated using the validation accuracy and validation loss, as well as a classification matrix and confusion matrix. The metrics in the classification matrix offer further opportunity for comparison with existing models and the confusion matrix provided evidence of the emotions responsible for low accuracy.

Due to the vast size of the dataset, if the testing phase was reached only 5 samples of each modality would be visualized and a confidence score would be obtained to evaluate the efficacy of the model.

3.5 Testing

Testing

1. **Data distribution**
   The dataset was distributed at a ratio of 90:5:5 for training, validation and test sets. The technique allows for unseen data to be used at each stage of model development.
2. **Model training**
   TensorFlow provided the framework for model training, incorporating pre trained models, compilation techniques and parametrization as well as evaluation metrics. The training was conducted over several epochs allowing the steady development of model weights.
3. **Model Evaluation and visualization**
   The model was evaluated against the test data using several performance metrics and predicted outcomes were visualized in video and confusion matrix form.

Deployment

Deployment considerations were not made as the model was developed as a proof of concept to validate state of the art methods.

3.6 Research design rationale

The lack of multimodal approaches for emotion detection, alongside recent advancements in non-multimodal environments inspired the research idea for the project. Adopting state of the art approaches to model conceptualization can serve the potential to fulfil many use cases across diverse domains of emotion detection. The use of transfer learning, in combination with BiLSTMs offers promise in improving the robustness of multimodal models, unifying modalities using temporal dependencies. The project makes use of the latest and most diverse datasets to create robust models with high levels of efficacy while reducing the burden of computational requirements. Ethical AI practices are adopted and only creative commons licensed datasets are used. The research strategy aligns with the current goals of multimodal emotion detection, building on the work of previous research.

3.7 Similar research and findings

The architecture of the model proves common for image based emotion classification models but the idea of a multimodal emotion detection model that uses ensemble transfer learning is a novel concept. The challenges faced because of the lack of research included not being able to find a serviceable base model for development. The model had to be developed using the architectures within emotion detection models from other modalities. Our research supports the conclusion that multimodal emotion detection has the potential to revolutionize many client based domains, given the models are robust and display efficacy within a variety of data environments.

3.8 Continuous improvement

Strategies reserved for later stages of development, such as data augmentation and pre trained model comparison have proven to further increase the robustness of the model and will be investigated once a feasible base model is developed.

3.9 Future work

Encoder based transformers showed promise in multimodal models, as well as displaying the ability for modalities to be trained individually so their architecture will be investigated in future work.

Image based emotion classification of audio data is another consideration for future work. By extracting Mel spectrograms, a combination of the MFCC and spectrogram, audio data can be visually represented. The images can be passed to image-based classification models to obtain insights on audio data, a technique to be investigated in the future.

Incorporating attention mechanisms showed faster generalization and therefore faster training times. With the vast computation cost of training multimodal CNN and BiLSTM based models, any reduction in training time is considered beneficial hence the inclusion of attention mechanisms will be investigated in the future.

The concept was developed using the RAVDESS dataset but to alleviate the issue with cultural diversity, future revisions of the model will be trained using the CREMA-D dataset.

Chapter 4: Design and Development

The importance of appropriate selection of frameworks and architecture must not be underestimated when detecting emotions from video and speech data. The chapter outlines the developmental considerations made in regard to the model.

Keras and Tensorflow.

Tensorflow is a framework that is part of the Keras library. The library contains several APIs which can be called upon to simplify several stages in model development, such as sequentially stacking a model, as well as model evaluation metrics and implementation techniques such as model.fit. Tensorflow adapts to its computing environment and incorporated the use of GPU tensors for faster file processing but removed the ability on Windows recently meaning the capabilities of developing on windows were greatly reduced.

Architecture model

The pre trained MobileNet model was combined with GlobalPooling3D and BiLSTM layers to produce a multimodal model to detect emotions using audio and video sources.

Model training

The model was developed using Jupyter Notebook and used Adam for optimizing the learning rate during training. Categorical cross-entropy loss and validation accuracy were used as metrics for evaluating the performance of the model.

Chapter 5: Evaluation and testing

The process of model development was interrupted by low computing resources, which prevented the training of the desire model. As a result, a speech only model was worked on and failed to produce relevant predictions. A confusion matrix and classification table were generated to share the outcomes.

Classification Report for Audio Model:

	precision	recall	f1-score	support
0	0.08	0.03	0.05	30
1	0.00	0.00	0.00	74
2	0.25	0.20	0.22	88
3	0.00	0.00	0.00	76
4	0.00	0.00	0.00	68
5	0.00	0.00	0.00	74
6	0.09	0.95	0.17	40
7	0.00	0.00	0.00	41
accuracy			0.12	491
macro avg	0.05	0.15	0.06	491
weighted avg	0.06	0.12	0.06	491

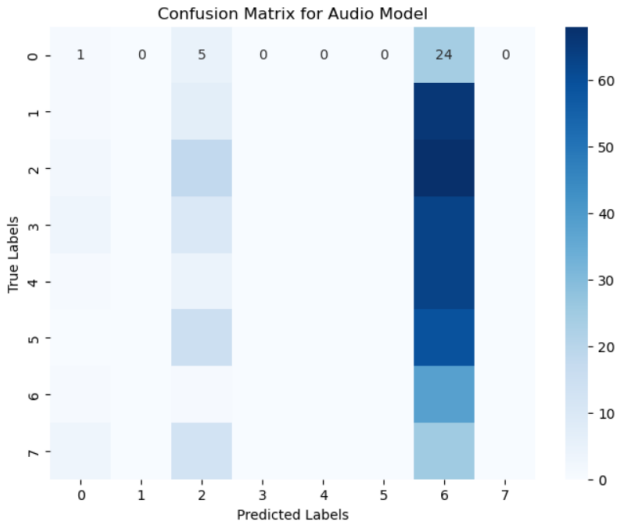

Figures 3 and 4: Classification report and confusion matrix for the failed model

The model showed an accuracy of 12% and the confusion matrix shows the distribution of true to false predictions. The accuracy and loss graphs were not obtained as they showed very poor progress.

Chapter 6: Results discussion

The results reflected on the difficulty of producing working multimodal models for emotion detection. The model performance was very poor which was expected of the incomplete model. After the feature data was concatenated the shape of the data was of an awkward size. As a result it could not be used as an input for the proposed model architecture, following the failure the random forest algorithm was considered but not used as it would not catch long term dependencies in the sequential data. Finally it was decided that the models will be developed separately until a cohesive input shape is found. The model used was an ensemble of 1D convolutional layers combined with LSTMs and GRU units. The model provided poor results but did execute training and provided a classification report and confusion matrix.

The model has a wide range of potential use cases in diverse domains. Some uses include transforming patient monitoring in healthcare, providing personalised educational resources based on student reactions to learning resources and detecting customer engagement with products or services for businesses.

Limitations faced by the project included a lack of computing resources, poor cultural diversity amongst datasets, a lack of research in the field of multimodal emotion detection and time constraints.

In the future a longer time will be spent in the development stage using better computing resources and model development will take place in smaller increments to improve the robustness of the data at each stage.

Chapter 7: Conclusion

The dissertation aimed to build a model that used a multimodal model to detect emotions using audio and video data. The novel approach holds several potential use cases that would revolutionise diverse domains. The intention was to build an ensemble model that used a pre trained transfer learning CNN and BiLSTM layer to carry out the emotion detection.

The research methodology identified gaps in existing knowledge as well as verification of the novelty of the project. It also provided insight into the state of the art in emotion detection for audio, image and text-based data. A detailed review of the available data sources was produced and the optimal dataset, CREMA-D was too complex, so we settled on RAVDESS, taking into consideration its lack of cultural diversity

The implementation failed and an effaceable model was not produced, although several insights were gained because of the experimentation. Limitations in the field were encountered, from the lack of computational resources to the limited number of existing approaches in the domain of emotion detection. While the research has made strides in the understanding of emotion detection technology, a successful model was not developed. The study serves as a compilation of the technologies implemented in modern emotion detection models.

References

Johnson, T.L. *et al.* (2022) 'Facial recognition systems in policing and racial disparities in arrests', *Government Information Quarterly*, 39(4), pp. 1–2. doi:10.1016/j.giq.2022.101753.

The easiest free gantt chart maker online (2023) *TeamGantt*. Available at: https://www.teamgantt.com/ (Accessed: 03 April 2024).

Badrulhisham, N.A. and Mangshor, N.N. (2021) 'Emotion recognition using Convolutional Neural Network (CNN)', *Journal of Physics: Conference Series*, 1962(1), pp. 1–2. doi:10.1088/1742-6596/1962/1/012040.

Yu, C. *et al.* (2010) 'Speech emotion recognition using support vector machines', *Communications in Computer and Information Science*, pp. 1–2. doi:10.1007/978-3-642-21402-8_35.

Febrian, R. *et al.* (2023) 'Facial expression recognition using bidirectional LSTM - CNN', *Procedia Computer Science*, 216, pp. 1–2. doi:10.1016/j.procs.2022.12.109.

Yang, D. *et al.* (2018) 'An emotion recognition model based on facial recognition in virtual learning environment', *Procedia Computer Science*, 125, pp. 2–10. doi:10.1016/j.procs.2017.12.003.

Sun, T. *et al.* (2020) 'Bidirectional spatial–temporal network for traffic prediction with Multisource Data', *Transportation Research Record: Journal of the Transportation Research Board*, 2674(8), pp. 78–89. doi:10.1177/0361198120927393.

Lazcano-Herrera, A.G. *et al.* (2023) 'BILSTM and SqueezeNet with transfer learning for EEG motor imagery classification: Validation With Own Dataset', *IEEE Access*, 11, pp. 136422–136436. doi:10.1109/access.2023.3328254.

Livingstone, S.R. and Russo, F.A. (2018) 'The Ryerson Audio-Visual Database of emotional speech and Song (RAVDESS): A Dynamic, multimodal set of facial and vocal expressions in North American English', *PLOS ONE*, 13(5). doi:10.1371/journal.pone.0196391.

Busso, C. *et al.* (2008) 'IEMOCAP: Interactive emotional Dyadic motion capture database', *Language Resources and Evaluation*, 42(4), pp. 335–359. doi:10.1007/s10579-008-9076-6.

Cao, H. *et al.* (2014) 'Crema-d: Crowd-sourced emotional Multimodal Actors Dataset', *IEEE Transactions on Affective Computing*, 5(4), pp. 377–390. doi:10.1109/taffc.2014.2336244.

Fortin, F.-A. *et al.* (2012) *DEAP: Evolutionary algorithms made easy: The Journal of Machine Learning Research: Vol 13, no 1*, *The Journal of Machine Learning Research*. Available at: https://dl.acm.org/doi/10.5555/2503308.2503311 (Accessed: 03 April 2024).

Jackson, P.J. and ul Haq, S. (2011) *(PDF) Surrey Audio-visual expressed emotion (SAVEE) database*, *ResearchGate*. Available at: https://www.researchgate.net/publication/260311132_Surrey_Audio-Visual_Expressed_Emotion_SAVEE_database (Accessed: 03 April 2024).

McKeown, G. *et al.* (2011) 'The Semaine Database: Annotated Multimodal Records of emotionally colored conversations between a person and a limited agent', *IEEE Transactions on Affective Computing*, 3(1), pp. 5–17. doi:10.1109/t-affc.2011.20.

Mollahosseini, A., Hasani, B. and Mahoor, M.H. (2017) *AffectNet: A database for facial expression, Valence, and arousal computing in the wild*, *arXiv.org*. Available at: https://arxiv.org/abs/1708.03985 (Accessed: 03 April 2024).

Nojavanasghari, B. *et al.* (2016) 'EmoReact: A multimodal approach and dataset for recognizing emotional responses in children', *Proceedings of the 18th ACM International Conference on Multimodal Interaction* [Preprint]. doi:10.1145/2993148.2993168.

Poria, S. *et al.* (2019) *Meld: A multimodal multi-party dataset for emotion recognition in conversations*, *arXiv.org*. Available at: https://arxiv.org/abs/1810.02508 (Accessed: 03 April 2024).

Dhall, A. *et al.* (2023) 'EmotiW 2023: Emotion recognition in the wild challenge', *INTERNATIONAL CONFERENCE ON MULTIMODAL INTERACTION* [Preprint]. doi:10.1145/3577190.3616545.

Ghaleb, E., Niehues, J. and Asteriadis, S. (2022) 'Joint modelling of audio-visual cues using attention mechanisms for emotion recognition', *Multimedia Tools and Applications*, 82(8), pp. 11239–11264. doi:10.1007/s11042-022-13557-w.

Google Drive link for model code

The code for the model can be accessed at: https://drive.google.com/file/d/13vLqDPkYGnHj8KpXhQbMHjc8yLn8pDgH/view?usp=sharing