Logic and Computer Design Fundamentals

Digital Systems

W2.2

Combinational Logic functional block
Arithmetic adder (Chap.3)

March 2026

Shiho Kim

Binary Adder

- **Half Adder (반가산기)**
  - **Circuit for 2-bit Arithmetic addition**

TABLE 3-11
Truth Table of Half Adder

Inputs		Outputs	
X	Y	C	S
0	0	0	0
0	1	0	1
1	0	0	1
1	1	1	0

$$S = \overline{X}Y + X\overline{Y} = X \oplus Y$$

$$C = XY$$

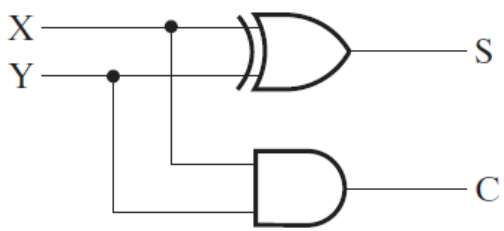

FIGURE 3-40
Logic Diagram of Half Adder

Binary Adder

- **Full Adder (전가산기)**
  - **Circuit for 3-bit Arithmetic addition including incoming Carry**

TABLE 3-12
Truth Table of Full Adder

Inputs			Outputs	
X	Y	Z	C	S
0	0	0	0	0
0	0	1	0	1
0	1	0	0	1
0	1	1	1	0
1	0	0	0	1
1	0	1	1	0
1	1	0	1	0
1	1	1	1	1

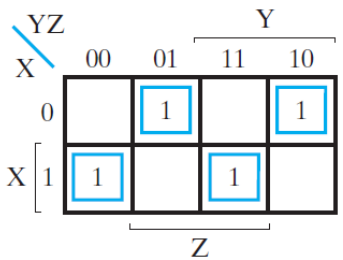

$S = \overline{X}\,\overline{Y}Z + \overline{X}Y\overline{Z} + X\overline{Y}\,\overline{Z} + XYZ$
$= X \oplus Y \oplus Z$

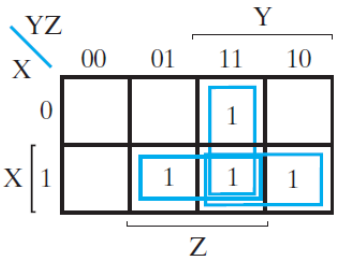

$C = XY + XZ + YZ$
$= XY + Z(X\overline{Y} + \overline{X}Y)$
$= XY + Z(X \oplus Y)$

$$S = \overline{X}\,\overline{Y}Z + \overline{X}Y\overline{Z} + X\overline{Y}\,\overline{Z} + XYZ$$

$$C = XY + XZ + YZ$$

Binary Adder

- **Full Adder (전가산기)**
  - **Circuit for 3-bit Arithmetic addition including incoming Carry**

$$S = \overline{X}\,\overline{Y}Z + \overline{X}Y\overline{Z} + X\overline{Y}\,\overline{Z} + XYZ$$

$$C = XY + XZ + YZ$$

$$S = (X \oplus Y) \oplus Z$$

$$C = XY + Z(X \oplus Y)$$

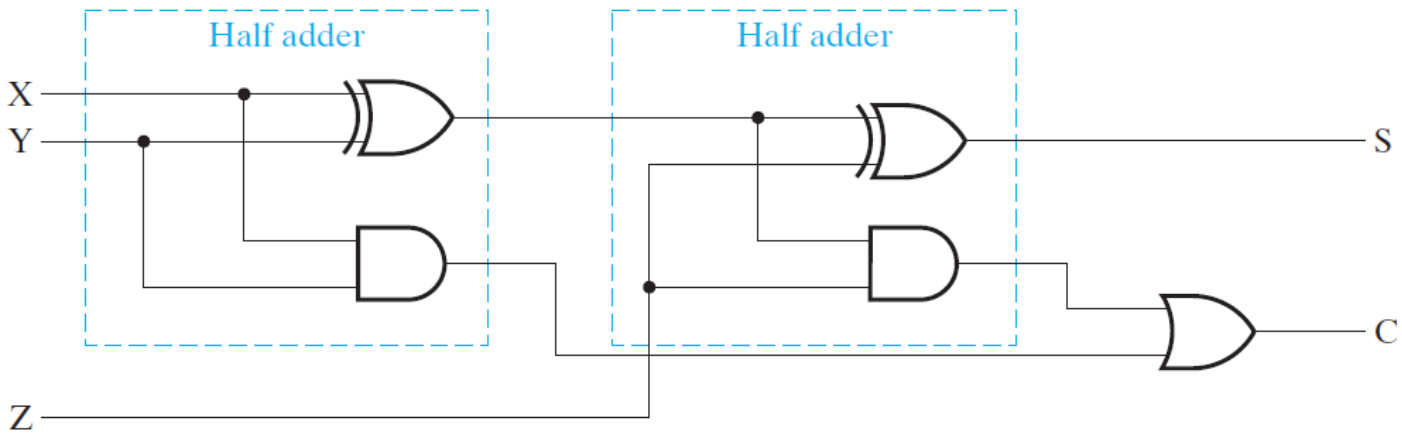

Ripple Carry Adder

- **Integer addition**
  - **Example of 4-bit ripple carry adder**

{C, S[3:0]} = A[3:0] + B[3:0]

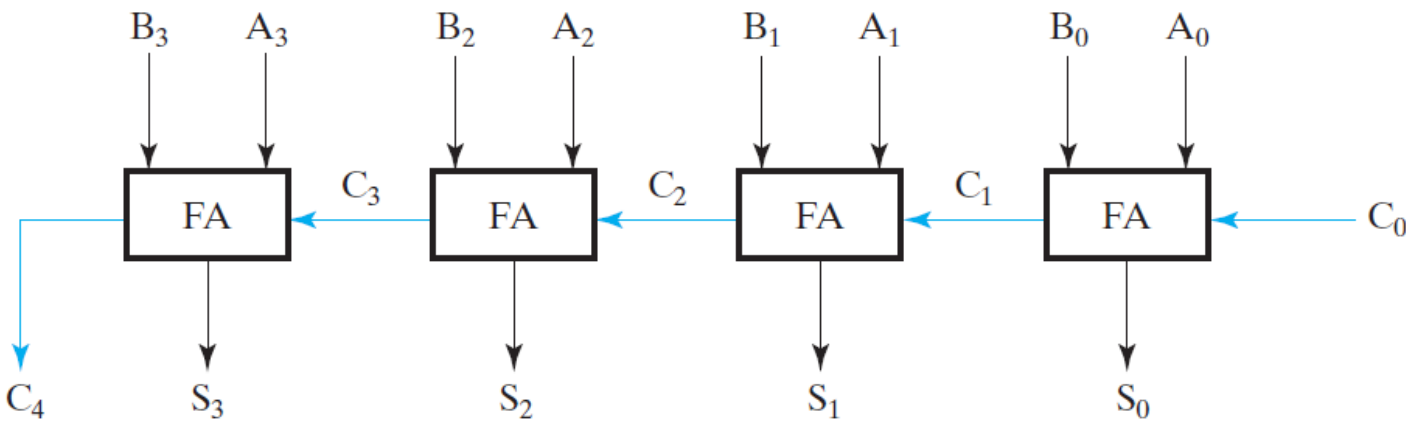

FIGURE 3-43
4-Bit Ripple Carry Adder

Binary Subtraction

- **Using 2's complement Number**

M-N => M+(2'c of N) = M+(2^n-N)= M-N +2^n

=> Discard carry

1. Add the 2s complement of the subtrahend N to the minuend M. This performs $M + (2^n - N) = M - N + 2^n$.
2. If $M \geq N$, the sum produces an end carry, 2^n. Discard the end carry, leaving result $M - N$.
3. If $M < N$, the sum does not produce an end carry, since it is equal to $2^n - (N - M)$, the 2s complement of $N - M$. Perform a correction, taking the 2s complement of the sum and placing a minus sign in front to obtain the result $-(N - M)$.

Binary Adder Subtractor

- **Using 2's complement Number**

  If s=0 then A[3:0]+B[3:0]
  Else if s=1 A[3:0]-B[3:0]

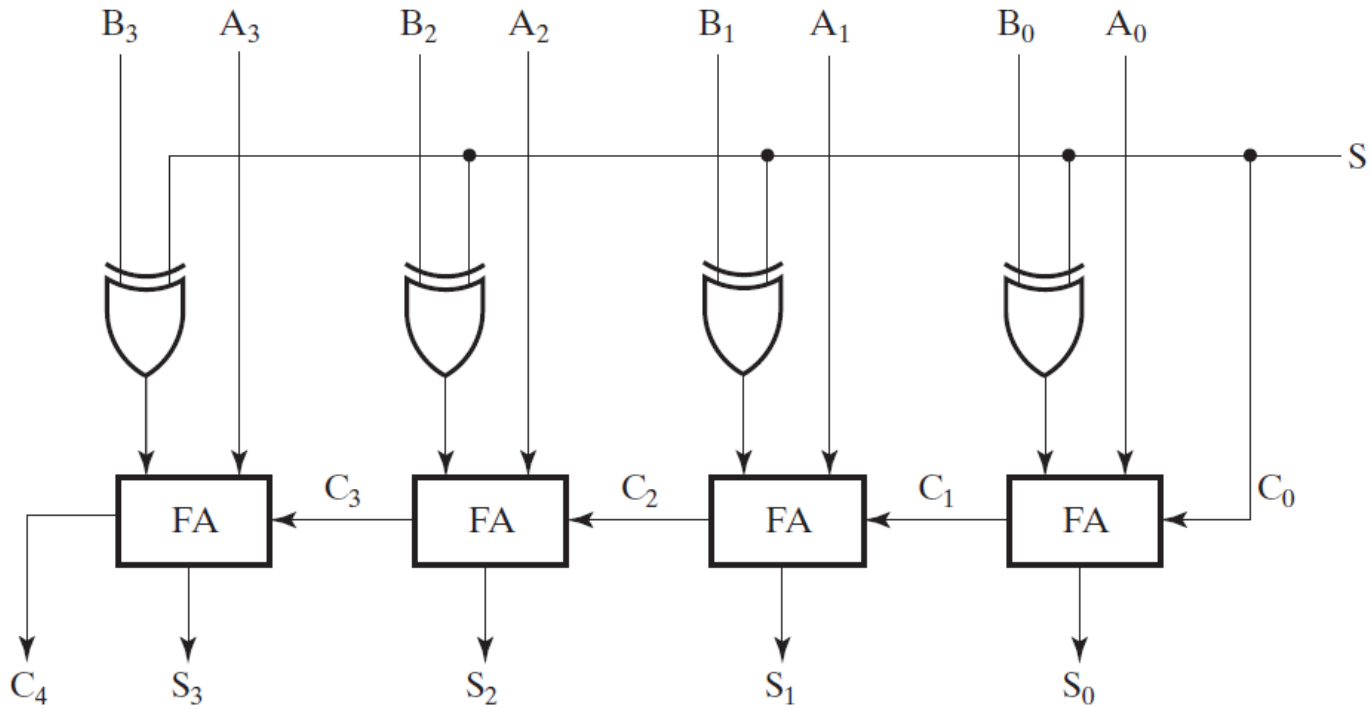

FIGURE 3-45
Adder-Subtractor Circuit

Carry and Overflow

EXAMPLE 3-21 Signed Binary Addition Using 2s Complement

+6	00000110	−6	11111010	+6	00000110	−6	11111010
+13	00001101	+13	00001101	−13	11110011	−13	11110011
+19	00010011	+7	00000111	−7	11111001	−19	11101101

EXAMPLE 3-22 Signed Binary Subtraction Using 2s Complement

− 6	11111010	11111010	+ 6	00000110	00000110
−(−13)	− 11110011	+ 00001101	−(–13)	− 11110011	+ 00001101
+ 7		00000111	+ 19		00010011

The end carry is discarded

Carry and Overflow

Carries:	01	Carries:	10
+70	01000110	−70	10111010
+80	01010000	−80	10110000
+150	10010110	−150	01101010

Overflow happened since 8-bit signed integer ranged from +127 to -128.

Carry and Overflow

If these two carries are not equal, (C_n!=C_{n-1}) an overflow has occurred.

Carries:	01	Carries:	10
+70	01000110	−70	10111010
+80	01010000	−80	10110000
+150	10010110	−150	01101010

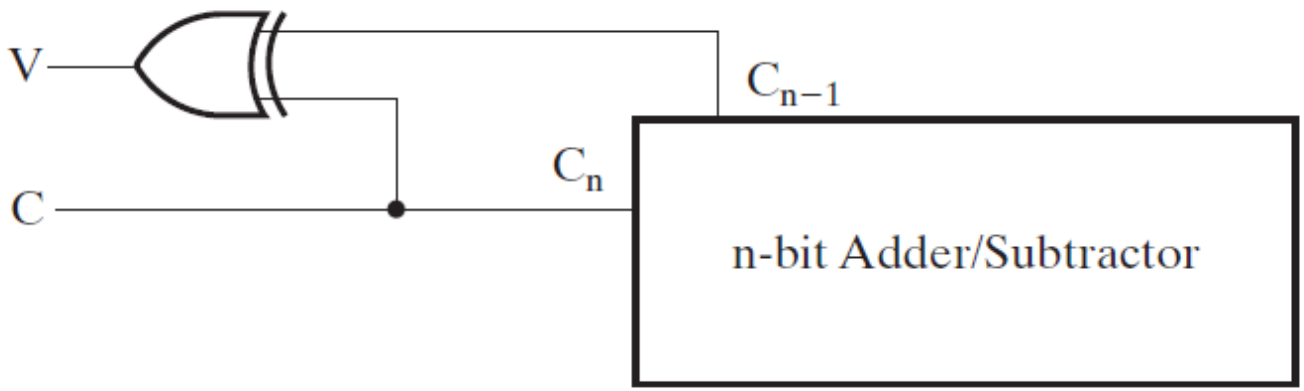

FIGURE 3-46
Overflow Detection Logic for Addition and Subtraction