CIRCUIT DIAGRAM:-

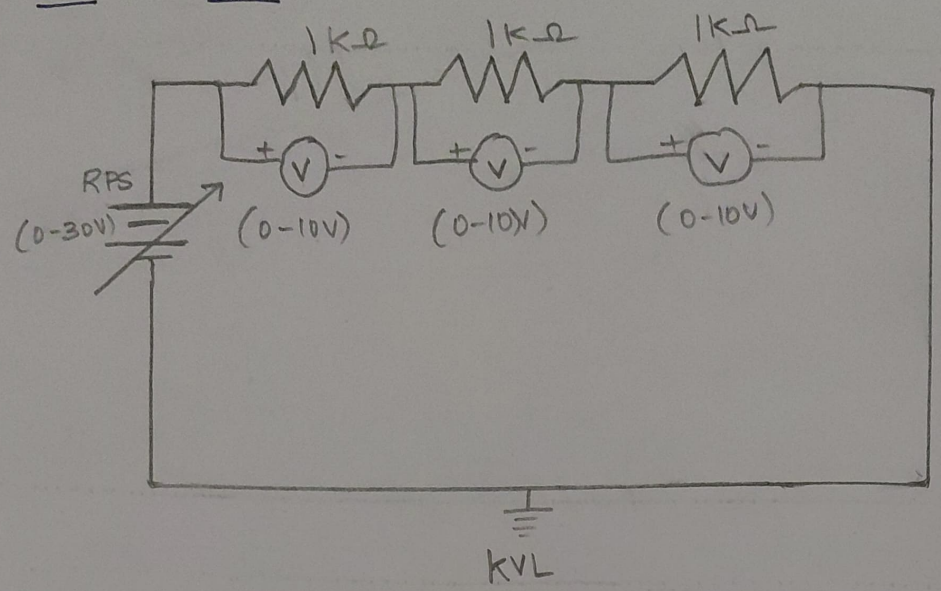

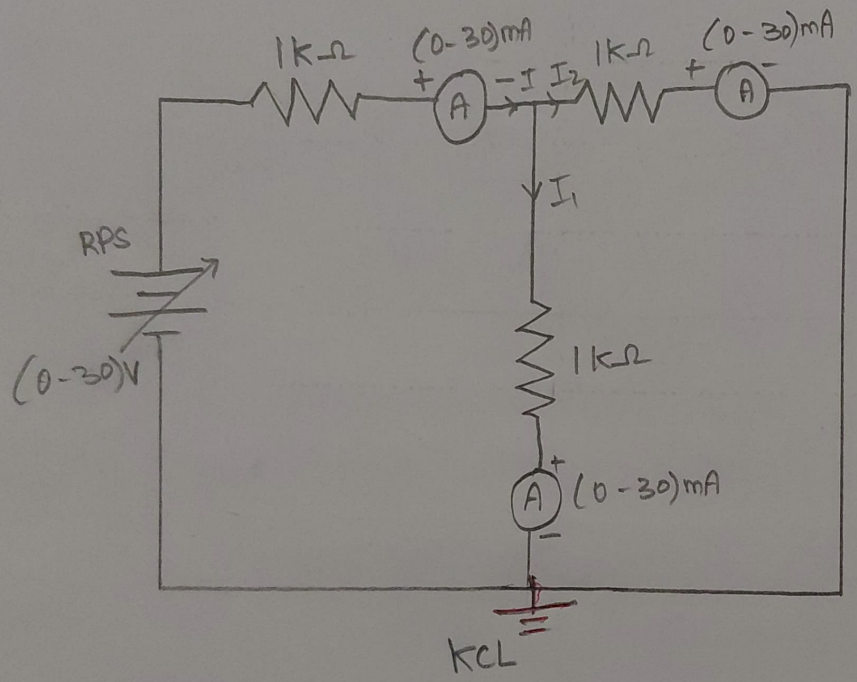

TABULAR COLUMN:-

V (Volts)	V_1 (Volts)	V_2 (Volts)	V_3 (Volts)	$V = V_1 + V_2 + V_3$ (Volts)	I (amps)	I_1 (amps)	I_2 (amps)	$I = I_1 + I_2$ (amps)
2	0.85V	0.82	0.86	2.55	1.06	0.54	0.53	1.06
6	2	1.98	1.96	5.94	3.35	1.66	1.68	3.35
9	3.1	3.1	3	9.2	5.19	2.58	2.58	5.19

Observed

EXP. NO:- 1
DATE:- 4/2/26

VERIFICATION OF KIRCHHOFF'S LAWS

AIM:-

To verify kirchoff's Voltage law and kirchhoff's current law both theoretically and practical for a given DC circuit.

APPARATUS REQUIRED:-

S.No	APPARATUS	SPECIFICATION	QUANTITY
1.	Regulated Power supply (RPS)	(0-30 V)	1
2.	Voltmeter	(0-30 V) MC	3
3.	Ammeter	(0-10 mA) MC	3
4.	Resistors	1 kΩ	3
5.	Bread Board	---	1

PROCEDURE:-

1. Give connections as per the circuit diagram.
2. Switch ON the supply, vary the RPS (Regulated Power supply) and set a particular input voltage.
3. Note down the readings of ammeters and voltmeters and tabulate them.
4. Vary the RPS to its minimum value and switch OFF the supply.
5. Reduce the RPS. using the tabulated values, verify kirchhoff's laws practically, and verify it theoretically.

CALCULATION:

(i) Practical Verification:

* V/I should be constant (ohm's law)
* V should be equal to $(V_1+V_2+V_3)$
* I_1 should be equal to (I_2+I_3).

(ii) Theoretical Verification:

* Kirchoff's Voltage Law:

(i) for 2V Supply:

$V_1 = 0.85\ V,\ V_2 = 0.82,\ V_3 = 0.86\ V$

$V = V_1 + V_2 + V_3 = 0.85 + 0.82 + 0.86.\ V = 2.55 \simeq 2V$

(ii) for 6V Supply:

$V_1 = 2V,\ V_2 = 1.98,\ V_3 = 1.96V$

$V = V_1 + V_2 + V_3 = 2 + 1.98 + 1.96 = 5.9V \simeq 6V$

(iii) for 9V Supply:

$V_1 = 3.1,\ V_2 = 3.1,\ V_3 = 3$

$V_t = V_1 + V_2 + V_3 = 3.1 + 3.1 + 3 = 9.2 \simeq 9V$

* Kirchhoff's Current Law:

(i) For 2V Supply:

$I = 1.06\ A,\ I_1 = 0.54,\ I_2 = 0.53$

$I = I_1 + I_2 = 0.54 + 0.53 = 1.06$

(ii) for 6V Supply:

$I = 3.35\ A,\ I_1 = 1.66A,\ I_2 = 1.68A,$

$I = 1.66 + 1.68 = 3.35\ A$

(iii) for 9V Supply:

$I = 5.19A,\ I_1 = 2.58\ A,\ I_2 = 2.58$

$I = 2.58 + 2.58 = 5.19A$

MARKS SPLIT-UP:-

SL.NO	Description	Marks Alloted	Marks Obtained
1.	Experimental setup / Connections	20 marks	20
2.	Observation / Reading	20 marks	20
3.	Calculation / Results	20 marks	20
4.	Viva	20 marks	20
5.	Record	20 marks	20
	Total	100	100

100

4/2/26

RESULT:-

Thus, Kirchhoff's Current Law and Kirchhoff's law are verified pratically and theoretically.