CIRCUIT DIAGRAM: VERIFICATION OF THEVENIN'S THEOREM:

(i) To measure I_L:-

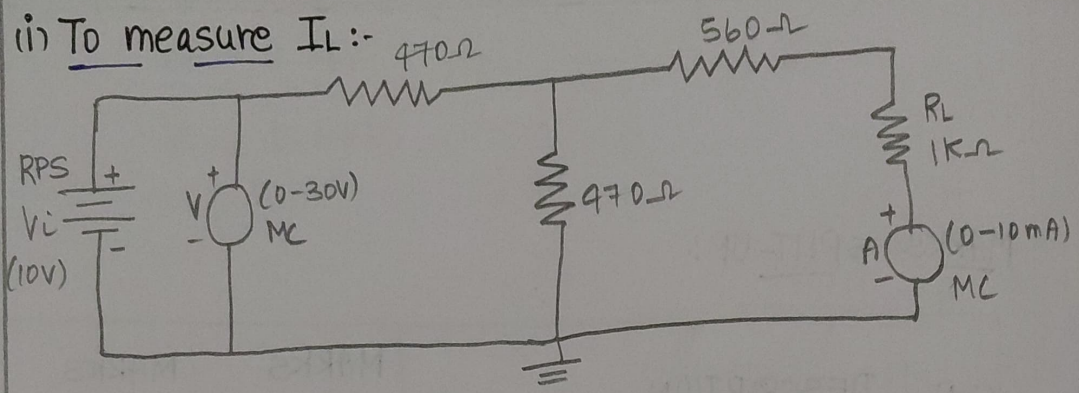

(ii) To measure R_{TH} or R_N:

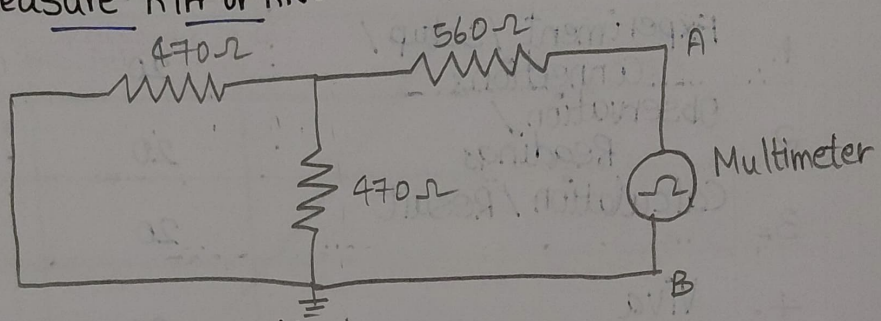

(iii) To measure V_{TH} or V_{OC}:

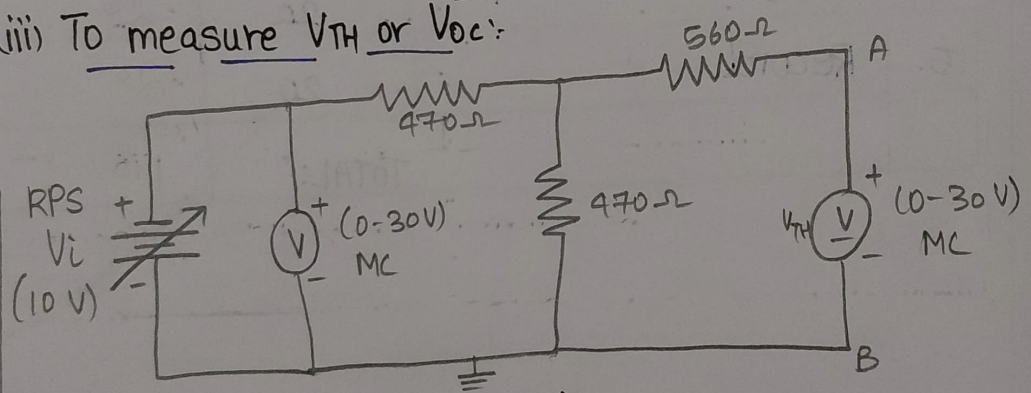

(iv) Thevenin's equivalent circuit:

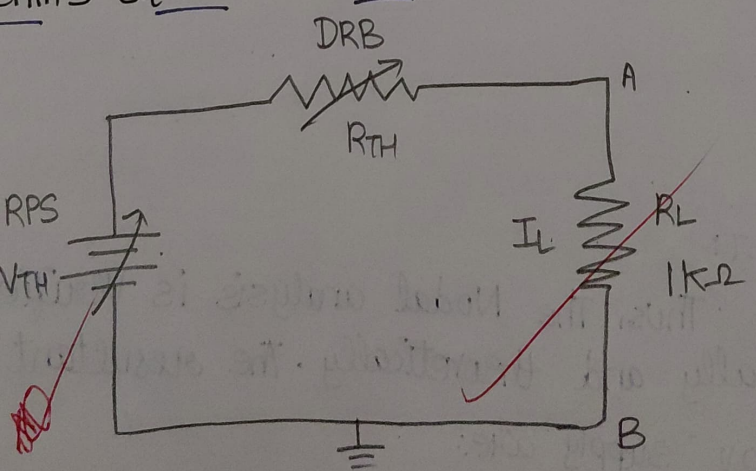

EXP: 4
DATE: 11/02/26

VERIFICATION OF THEVENIN'S THEOREM

AIM:-

To verify Thevenin's theorem pratically and theoretically for the given DC circuit.

APPARATUS REQUIRED:

S.No	APPARATUS	SPECIFICATION	QUANTITY
1.	Regulated Power Supply	(0-30V)	1
2.	Voltmeter	(0-30V)	1
3.	Ammeter	(0-10 mA)	1
4.	Resistors	470Ω 560Ω 1KΩ	2 1 1
5.	Bread board	—	1
6.	Multimeter	—	1

PROCEDURE:-

1. Make the connections as per the circuit diagram.
2. Vary the RPS and set an input voltage of 10V.
3. Note down the voltmeter reading (V_i) and ammeter reading (I_L) in Tabular Column.
4. Measure the Thevenin's resistance R_{TH}.
5. Calculate the I_L value using the formula.

Thevenin's Theorem :- $I_L = V_{TH} / (R_{TH} + R_L)$

Norton's Theorem :- $I_L = I_N * R_N (R_N + R_L)$

TABULAR COLUMN 1 :-

↳ to measure I_L

Vi (volts)	I_L (amps)
2V	0.36 mA
4V	0.72 mA
6V	1.08 mA
8V	1.44 mA
10V	1.80 mA

TABULAR COLUMN 2 :-

↳ to measure R_{TH} or R_N

From circuit diagram 2, $R_{TH} = R_N = 798\ \Omega$

TABULAR COLUMN 3 :-

↳ to measure V_{TH} or V_{OC}

Vi (Volts)	V_{TH} (Volts)
2V	0.65V
4V	1.30V
6V	1.95V
8V	2.60V
10 V	8.25V

$V_{TH} = 0.325 \times V_i$

verified 24/2/26

MODEL CALCULATION :-

Given :- Supply voltage = 10V

$R_1 = 470\Omega$, $R_2 = 470\Omega$, $R_3 = 560\Omega$, $R_4 = 1K\Omega$

For calculating V_{TH} ;

$R_P = \frac{470 \times 470}{470+470} = 235\Omega$

$V_{TH} = \frac{V_i \times R_P}{R_i \times R_P} = 3.33V$

Practical = 0.325V

For calculating R_{TH} ;

470 parallel to 470 = 235Ω

$R_{TH} = 560 + 239 = 795\Omega$

For calculating I_L ;

$I_L = V_{TH} / R_{TH} + R_L$

$= 323 / 795 + 1000$

$= 1.85$ mA.

MARKS SPLIT-UP:-

SNo	DESCRIPTION	MARKS ALLOTED	MARKS OBTAINED
1.	EXPERIMENTAL SETUP/CONNECTIONS	20	20
2.	OBSERVATION / READINGS	20	20
3.	CALCULATION / RESULT	20	20
4.	VIVA	20	20
5.	RECORD	20	20
		TOTAL	100

100

24/9/26

RESULT:-

Thus, Thevenin's theorem is verified practically and theoretically.