CIRCUIT DIAGRAM:- VERIFICATION OF NORTON'S THEOREM

(i) To measure I_L:-

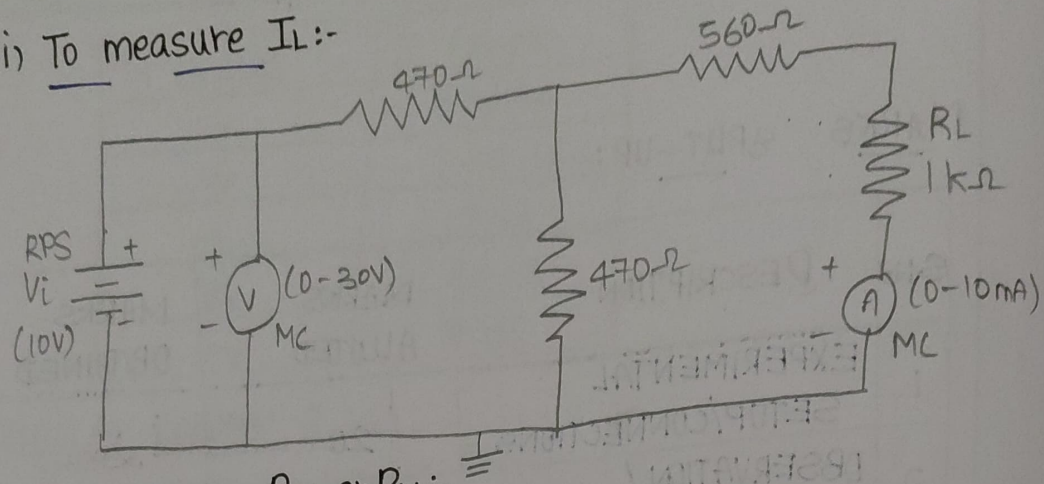

(ii) To measure R_{TH} or R_N:-

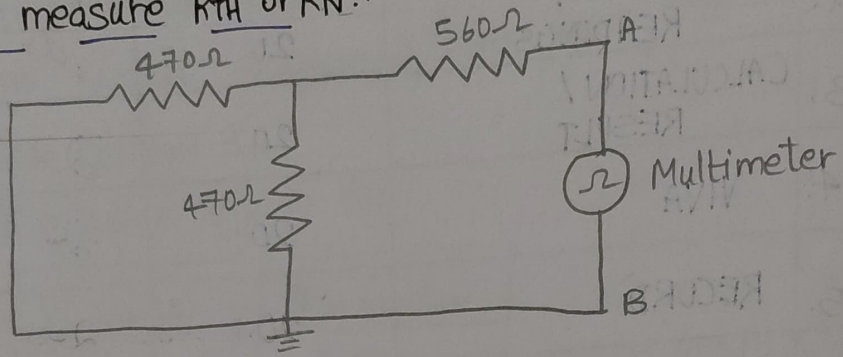

(iii) To measure I_N or I_{sc}:-

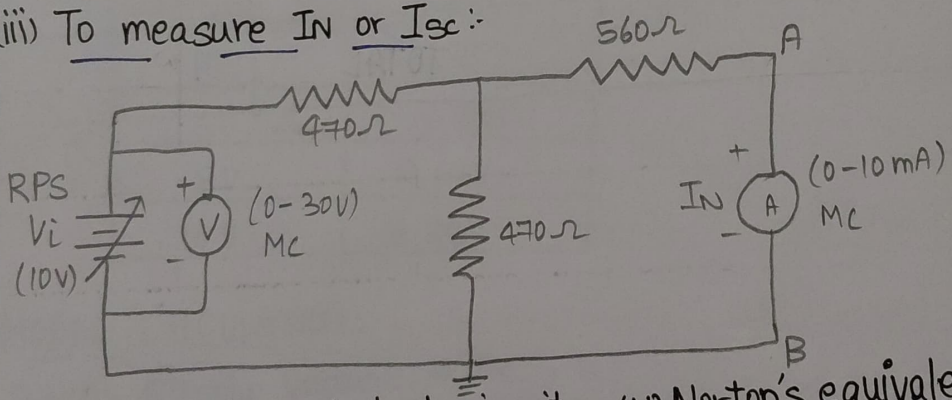

(iv) Thevenin's equivalent circuit

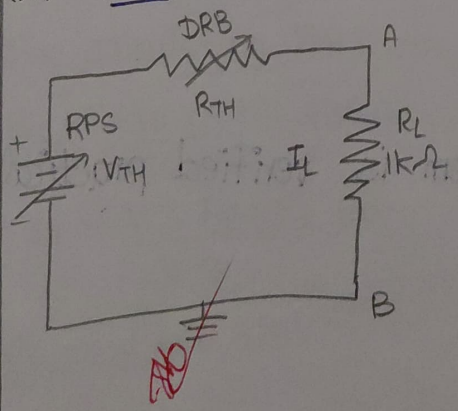

(v) Norton's equivalent circuit

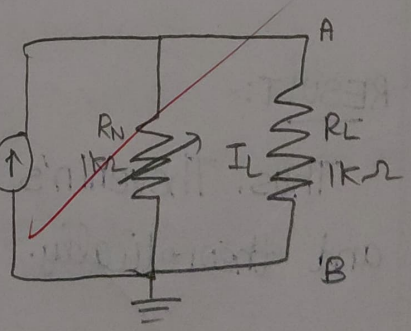

EXP:- 5
DATE: 24/2/26

VERIFICATION OF NORTON'S THEOREM

AIM:-

To verify Norton's theorem pratically and theoretically for the given DC circuit.

APPARATUS REQUIRED:-

S.No	APPARATUS	SPECIFICATION	QUANTITY
1.	Regulated Power Supply	(0-30V)	1
2.	Voltmeter	(0-30 V)	1
3.	Ammeter	(0-10 mA)	1
4.	Resistors	470 Ω 560 Ω 1 kΩ	2 1 1
5.	Bread Board	—	1
6.	Multimeter	—	1

PROCEDURE:-

1. Vary the RPS and set an input voltage of 10V.
2. Note down the voltmeter reading (V_i) and ammeter reading (I_L) in Tabular column
3. Measure the Thevenin's resistance R_{TH} = Norton's resistance.
4. Draw the Thevenin's equivalent circuit and Norton's equivalent circuit as shown in circuit diagrams 5 and 6 respectively.

TABULAR COLUMN :-

(i) To measure I_L :-

V_i	I_L
2	0.35
4	0.71
6	1.07
8	1.43
10	1.76

(ii) To Measure R_{TH}/R_V :-

V_i	R_{TH}
2	7.90
4	7.98
6	803
8	796
10	800

(iii) To measure I_N/I_{sc} :-

V_i	I_N
2	0.80
4	1.62
6	2.45
8	3.25
10	4.05

Model Calculations :-

Given;

$V_i = 10\ V$

$R_1 = 470\Omega$, $R_2 = 470\Omega$, $R_3 = 560\Omega$

V_{TH} :

Parallel resistors

$R_P = 470 \| 470 = 235\Omega$

$V_{TH} = \frac{10 \times 235}{705} = 3.33V$

R_{TH} :

$R_{TH} = 560 + 235$

$= 795\Omega$

I_N :

$I_N = V_{TH}/R_{TH}$

$= 3.33/795$

$= 4.19\ mA.$

I_L :

$I_L = V_{TH}/R_{TH} + R_L$

$= \frac{3.33}{1795} = 1.85\ mA.$

5. Calculate the I_L value using the formula

Thevenin's Theorem : $I_L = V_{TH} / (R_{TH} + R_L)$

Norton's Theorem: $I_L = I_N * R_N / (R_N + R_L)$.

6. Theoretically verify the Norton's Theorem.

MARKS SPLIT-UP:

SL.No	DESCRIPTION	MARKS ALLOTED	MARKS OBTAINED
1.	EXPERIMENTAL SETUP / CONNECTIONS	20	20
2.	OBSERVATION / READING	20	20
3.	CALCULATIONS / RESULTS	20	20
4.	VIVA	20	20
5.	RECORD	20	20
	TOTAL	100	100

24/4/20

RESULT:

Thus, Norton's theorem is verified practically and theoretically.