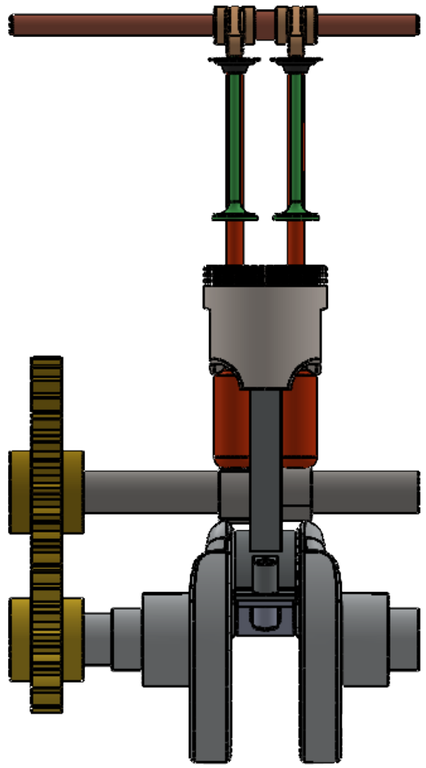

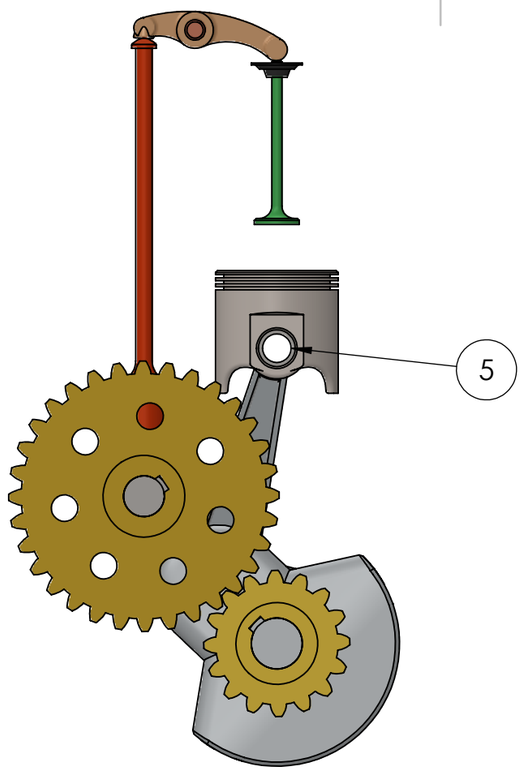

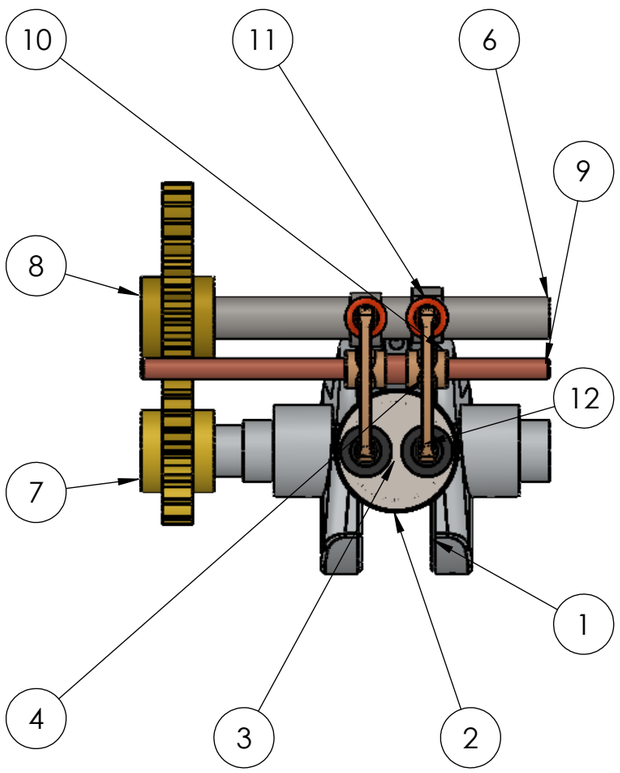

ITEM NO.	PART NUMBER	DESCRIPTION	QTY.
1	Part4		1
2	Part1		1
3	Part2		1
4	Part3		1
5	Part7		1
6	Part13		1
7	Part5		1
8	Part6		1
9	Part9		1
10	Part14		2
11	Part8		2
12	valve sub assembly		2

UNLESS OTHERWISE SPECIFIED:
DIMENSIONS ARE IN MILLIMETERS
SURFACE FINISH:
TOLERANCES:
LINEAR:
ANGULAR:

FINISH:

DEBURR AND BREAK SHARP EDGES

DO NOT SCALE DRAWING

REVISION

	NAME	SIGNATURE	DATE
DRAWN			
CHK'D			
APPV'D			
MFG			
Q.A			

TITLE:

MATERIAL:

WEIGHT:

DWG NO.

Single Cylinder Engine

A3

SCALE:1:5

SHEET 1 OF 1