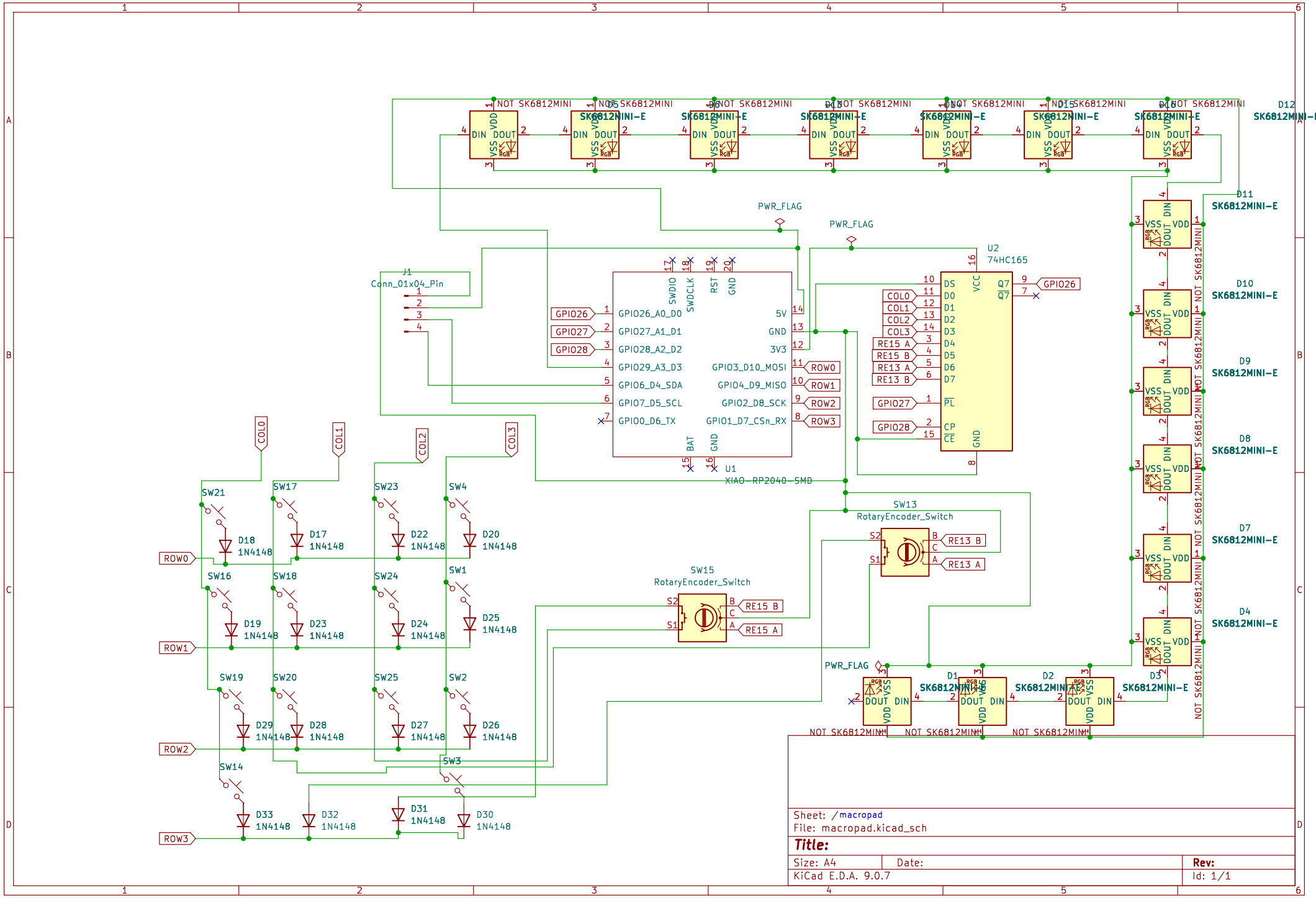
D12
SK6812MINI-E
D11
SK6812MINI-E
D10
SK6812MINI-E
D9
SK6812MINI-E
D8
SK6812MINI-E
D7
SK6812MINI-E
D4
SK6812MINI-E
D1
SK6812MINI-E
D2
SK6812MINI-E
D3
SK6812MINI-E
NOT SK6812MINI
PWR_FLAG
J1
Conn_01x04_Pin
U1
XIAO-RP2040-SMD
GPIO26_A0_D0
GPIO27_A1_D1
GPIO28_A2_D2
GPIO29_A3_D3
GPIO6_D4_SDA
GPIO7_D5_SCL
GPIO0_D6_TX
GPIO3_D10_MOSI
GPIO4_D9_MISO
GPIO2_D8_SCK
GPIO1_D7_CSn_RX
5V
GND
3V3
SWDIO
SWDCLK
RST
BAT
U2
74HC165
SW13
RotaryEncoder_Switch
SW15
RotaryEncoder_Switch
ROW0
ROW1
ROW2
ROW3
COL0
COL1
COL2
COL3
SW21
SW17
SW23
SW4
SW16
SW18
SW24
SW1
SW19
SW20
SW25
SW2
SW14
SW3
D18 1N4148
D17 1N4148
D22 1N4148
D20 1N4148
D19 1N4148
D23 1N4148
D24 1N4148
D25 1N4148
D29 1N4148
D28 1N4148
D27 1N4148
D26 1N4148
D33 1N4148
D32 1N4148
D31 1N4148
D30 1N4148
Sheet: /macropad
File: macropad.kicad_sch
Title:
Size: A4
Date:
Rev:
KiCad E.D.A. 9.0.7
Id: 1/1