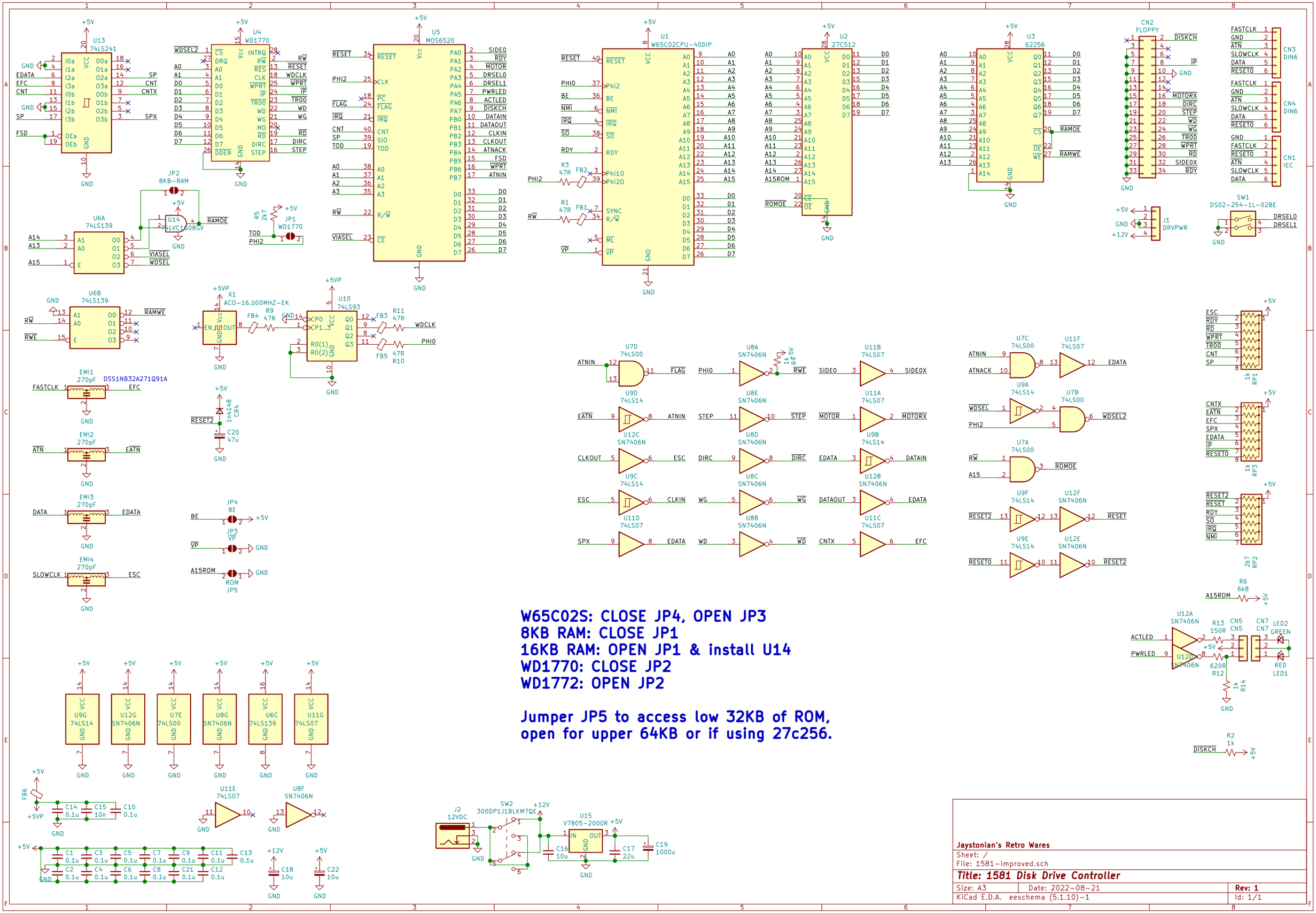

W65C02S: CLOSE JP4, OPEN JP3
8KB RAM: CLOSE JP1
16KB RAM: OPEN JP1 & install U14
WD1770: CLOSE JP2
WD1772: OPEN JP2

Jumper JP5 to access low 32KB of ROM, open for upper 64KB or if using 27c256.

Jaystonian's Retro Wares		
Sheet: /		
File: 1581-improved.sch		
Title: 1581 Disk Drive Controller		
Size: A3	Date: 2022-08-21	Rev: 1
KiCad E.D.A. eeschema (5.1.10)-1		Id: 1/1