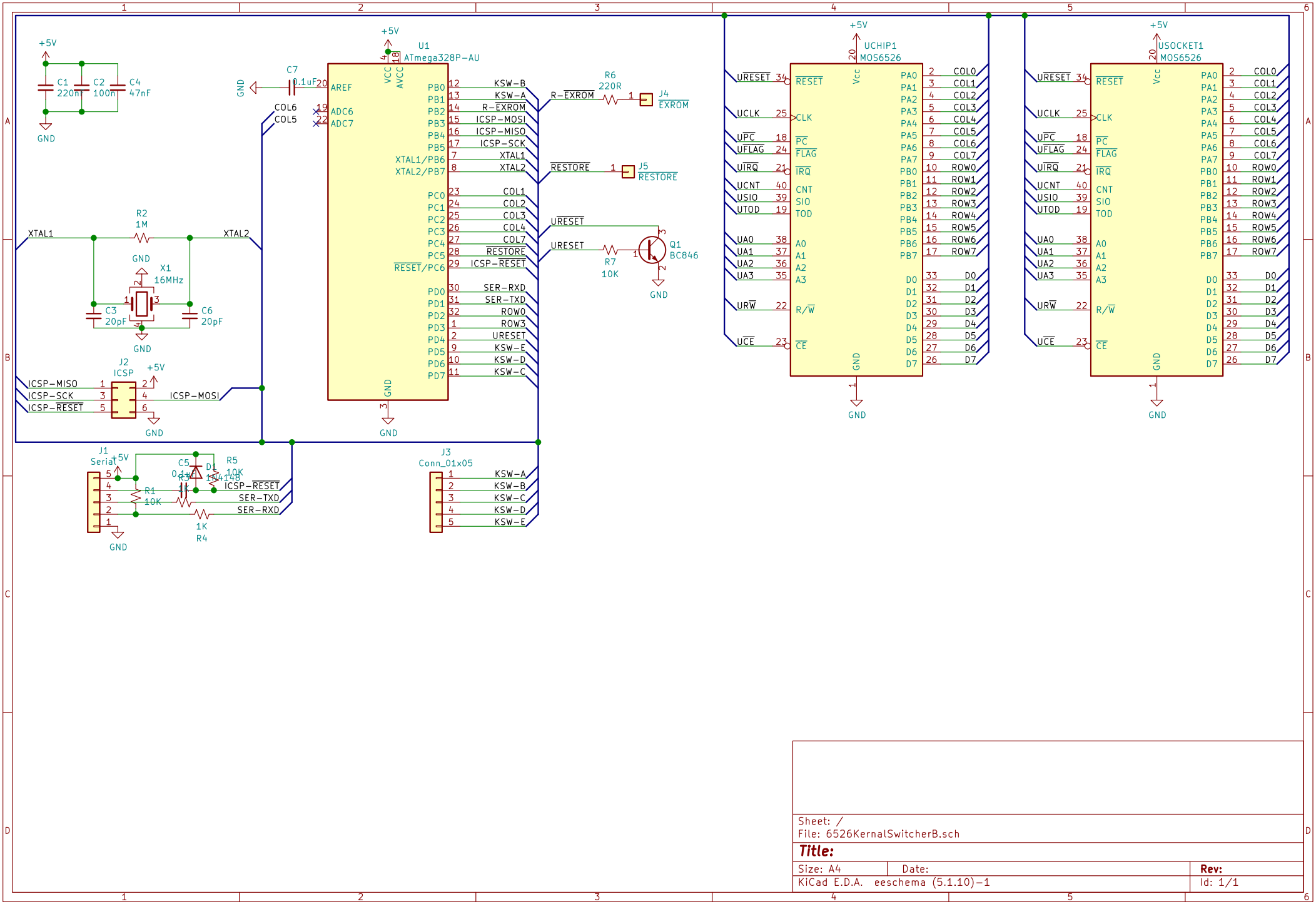

Sheet: /
File: 6526KernalSwitcherB.sch

Title:

Size: A4	Date:	Rev:
KiCad E.D.A. eeschema (5.1.10)-1		Id: 1/1