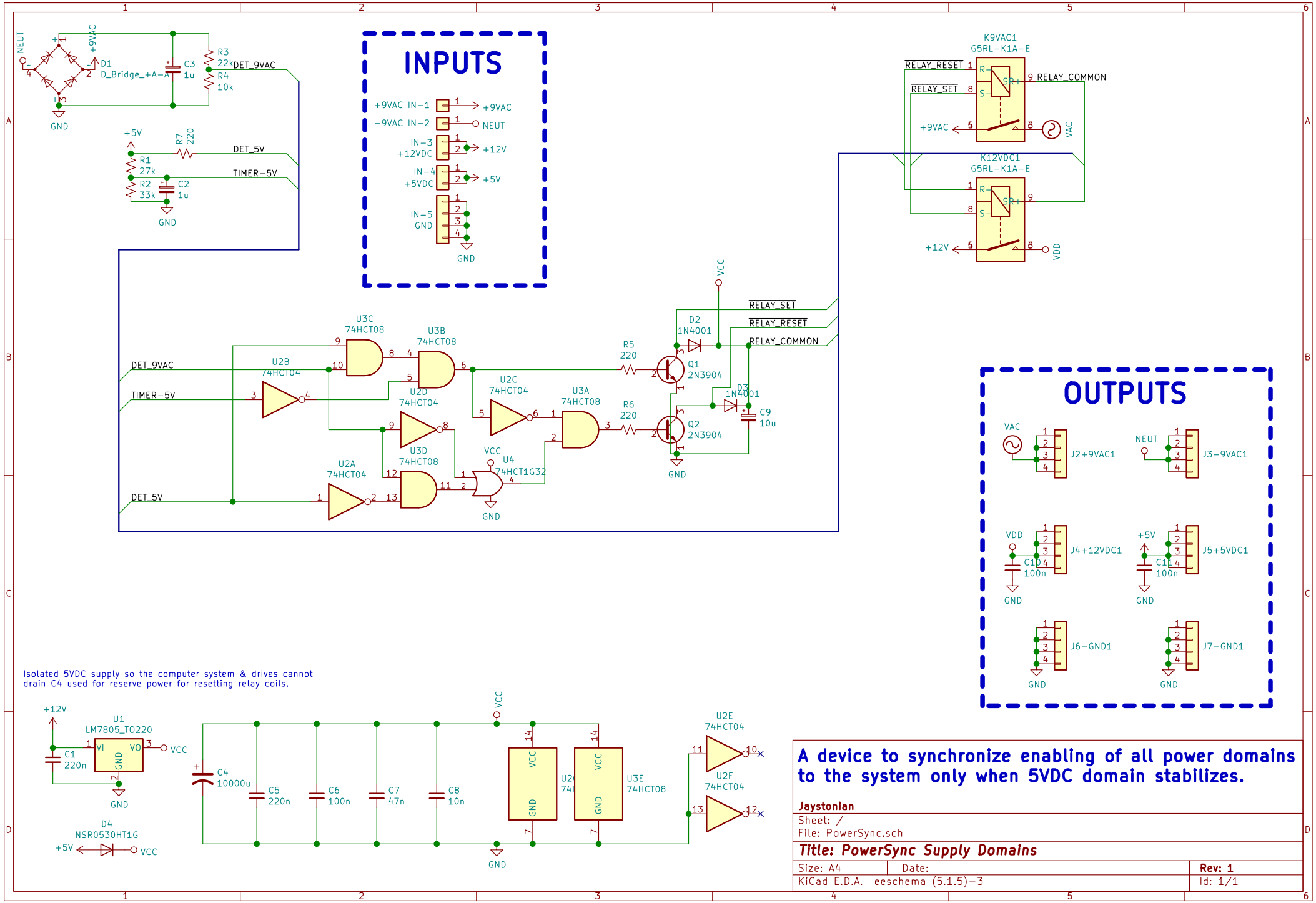
INPUTS
+9VAC IN-1
-9VAC IN-2
IN-3 +12VDC
IN-4 +5VDC
IN-5 GND
OUTPUTS
VAC
NEUT
VDD
+5V
J2+9VAC1
J3-9VAC1
J4+12VDC1
J5+5VDC1
J6-GND1
J7-GND1
K9VAC1 G5RL-K1A-E
K12VDC1 G5RL-K1A-E
RELAY_RESET
RELAY_SET
RELAY_COMMON
D1 D_Bridge_+A-A
R3 22k
R4 10k
C3 1u
R1 27k
R2 33k
R7 220
C2 1u
DET_9VAC
DET_5V
TIMER-5V
U2A 74HCT04
U2B 74HCT04
U2C 74HCT04
U2D 74HCT04
U3A 74HCT08
U3B 74HCT08
U3C 74HCT08
U3D 74HCT08
U4 74HCT1G32
R5 220
R6 220
Q1 2N3904
Q2 2N3904
D2 1N4001
D3 1N4001
C9 10u
VCC
GND
Isolated 5VDC supply so the computer system & drives cannot drain C4 used for reserve power for resetting relay coils.
U1 LM7805_TO220
C1 220n
C4 10000u
C5 220n
C6 100n
C7 47n
C8 10n
D4 NSR0530HT1G
U2E 74HCT04
U2F 74HCT04
U3E 74HCT08
A device to synchronize enabling of all power domains to the system only when 5VDC domain stabilizes.
Jaystonian
Sheet: /
File: PowerSync.sch
Title: PowerSync Supply Domains
Size: A4
Date:
Rev: 1
KiCad E.D.A. eeschema (5.1.5)-3
Id: 1/1