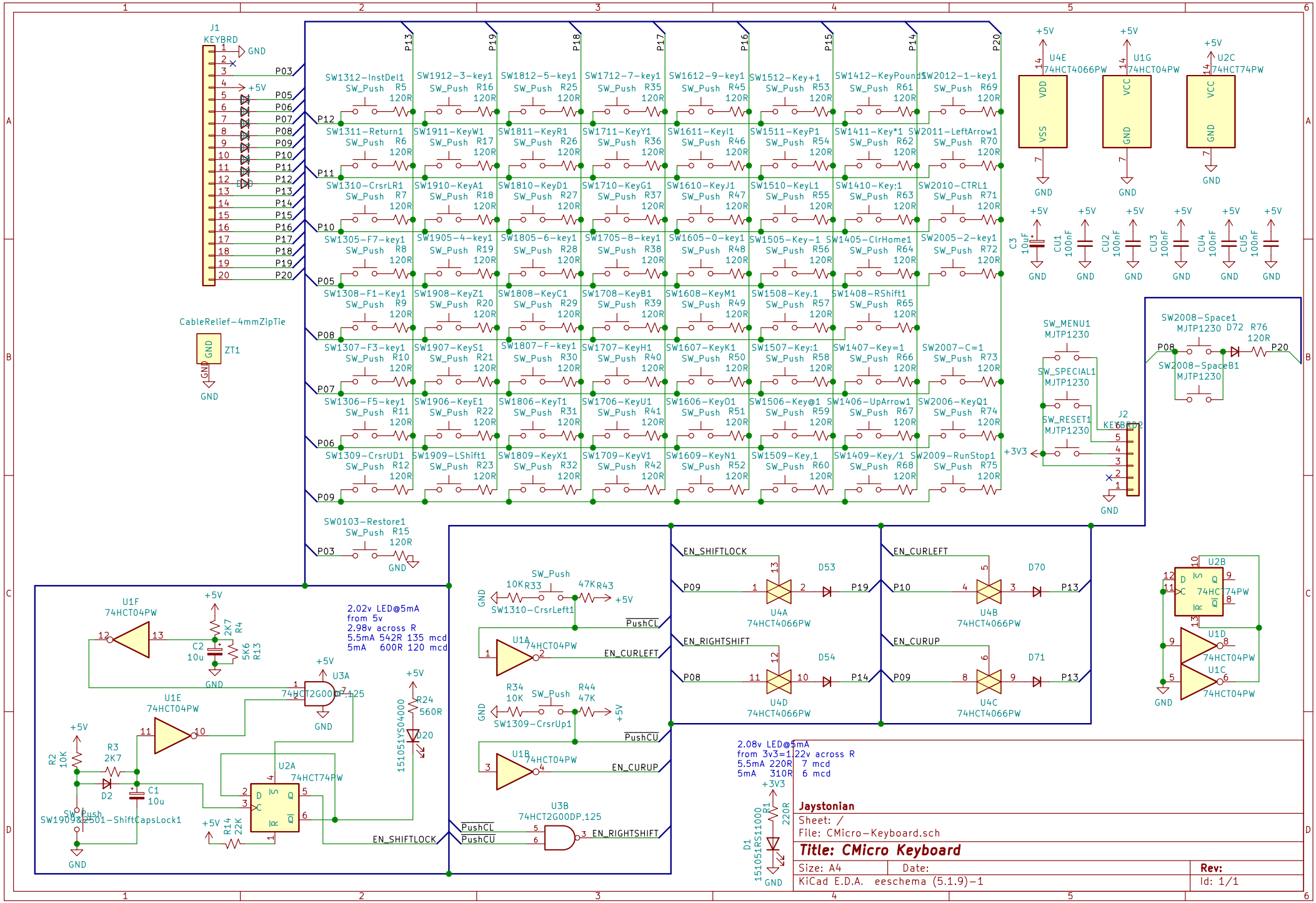
J1
KEYBRD
GND
+5V
P03
P05
P06
P07
P08
P09
P10
P11
P12
P13
P14
P15
P16
P17
P18
P19
P20
CableRelief-4mmZipTie
ZT1
SW1312-InstDel1 SW_Push R5 120R
SW1912-3-key1 SW_Push R16 120R
SW1812-5-key1 SW_Push R25 120R
SW1712-7-key1 SW_Push R35 120R
SW1612-9-key1 SW_Push R45 120R
SW1512-Key+1 SW_Push R53 120R
SW1412-KeyPound1 SW_Push R61 120R
SW2012-1-key1 SW_Push R69 120R
SW1311-Return1 SW_Push R6 120R
SW1911-KeyW1 SW_Push R17 120R
SW1811-KeyR1 SW_Push R26 120R
SW1711-KeyY1 SW_Push R36 120R
SW1611-KeyI1 SW_Push R46 120R
SW1511-KeyP1 SW_Push R54 120R
SW1411-Key*1 SW_Push R62 120R
SW2011-LeftArrow1 SW_Push R70 120R
SW1310-CrsrLR1 SW_Push R7 120R
SW1910-KeyA1 SW_Push R18 120R
SW1810-KeyD1 SW_Push R27 120R
SW1710-KeyG1 SW_Push R37 120R
SW1610-KeyJ1 SW_Push R47 120R
SW1510-KeyL1 SW_Push R55 120R
SW1410-Key;1 SW_Push R63 120R
SW2010-CTRL1 SW_Push R71 120R
SW1305-F7-key1 SW_Push R8 120R
SW1905-4-key1 SW_Push R19 120R
SW1805-6-key1 SW_Push R28 120R
SW1705-8-key1 SW_Push R38 120R
SW1605-0-key1 SW_Push R48 120R
SW1505-Key-1 SW_Push R56 120R
SW1405-ClrHome1 SW_Push R64 120R
SW2005-2-key1 SW_Push R72 120R
SW1308-F1-Key1 SW_Push R9 120R
SW1908-KeyZ1 SW_Push R20 120R
SW1808-KeyC1 SW_Push R29 120R
SW1708-KeyB1 SW_Push R39 120R
SW1608-KeyM1 SW_Push R49 120R
SW1508-Key.1 SW_Push R57 120R
SW1408-RShift1 SW_Push R65 120R
SW1307-F3-key1 SW_Push R10 120R
SW1907-KeyS1 SW_Push R21 120R
SW1807-F-key1 SW_Push R30 120R
SW1707-KeyH1 SW_Push R40 120R
SW1607-KeyK1 SW_Push R50 120R
SW1507-Key:1 SW_Push R58 120R
SW1407-Key=1 SW_Push R66 120R
SW2007-C=1 SW_Push R73 120R
SW1306-F5-key1 SW_Push R11 120R
SW1906-KeyE1 SW_Push R22 120R
SW1806-KeyT1 SW_Push R31 120R
SW1706-KeyU1 SW_Push R41 120R
SW1606-KeyO1 SW_Push R51 120R
SW1506-Key@1 SW_Push R59 120R
SW1406-UpArrow1 SW_Push R67 120R
SW2006-KeyQ1 SW_Push R74 120R
SW1309-CrsrUD1 SW_Push R12 120R
SW1909-LShift1 SW_Push R23 120R
SW1809-KeyX1 SW_Push R32 120R
SW1709-KeyV1 SW_Push R42 120R
SW1609-KeyN1 SW_Push R52 120R
SW1509-Key,1 SW_Push R60 120R
SW1409-Key/1 SW_Push R68 120R
SW2009-RunStop1 SW_Push R75 120R
SW0103-Restore1 SW_Push R15 120R
U4E 74HCT4066PW
U1G 74HCT04PW
U2C 74HCT74PW
VDD VSS VCC GND
C3 10uF
CU1 100nF
CU2 100nF
CU3 100nF
CU4 100nF
CU5 100nF
SW_MENU1 MJTP1230
SW_SPECIAL1 MJTP1230
SW_RESET1 MJTP1230
+3V3
J2
KEYBRD2
SW2008-Space1 MJTP1230
D72
R76 120R
SW2008-SpaceB1 MJTP1230
U1F 74HCT04PW
C2 10u
2K7 R4
5K6 R13
U3A 74HCT2G00DP,125
U1E 74HCT04PW
R2 10K
R3 2K7
D2
C1 10u
SW_Push
SW1909-2501-ShiftCapsLock1
U2A 74HCT74PW
R14 22K
R24 560R
151051YS04000
D20
EN_SHIFTLOCK
2.02v LED@5mA
from 5v
2.98v across R
5.5mA 542R 135 mcd
5mA 600R 120 mcd
R33 10K
R43 47K
SW1310-CrsrLeft1
PushCL
U1A 74HCT04PW
EN_CURLEFT
R34 10K
R44 47K
SW1309-CrsrUp1
PushCU
U1B 74HCT04PW
EN_CURUP
U3B 74HCT2G00DP,125
EN_RIGHTSHIFT
EN_SHIFTLOCK
EN_CURLEFT
EN_RIGHTSHIFT
EN_CURUP
D53
D54
D70
D71
U4A 74HCT4066PW
U4B 74HCT4066PW
U4D 74HCT4066PW
U4C 74HCT4066PW
U2B 74HCT74PW
U1D 74HCT04PW
U1C 74HCT04PW
2.08v LED@5mA
from 3v3=1.22v across R
5.5mA 220R 7 mcd
5mA 310R 6 mcd
R1 220R
D1 151051RS11000
Jaystonian
Sheet: /
File: CMicro-Keyboard.sch
Title: CMicro Keyboard
Size: A4
Date:
Rev:
KiCad E.D.A. eeschema (5.1.9)-1
Id: 1/1