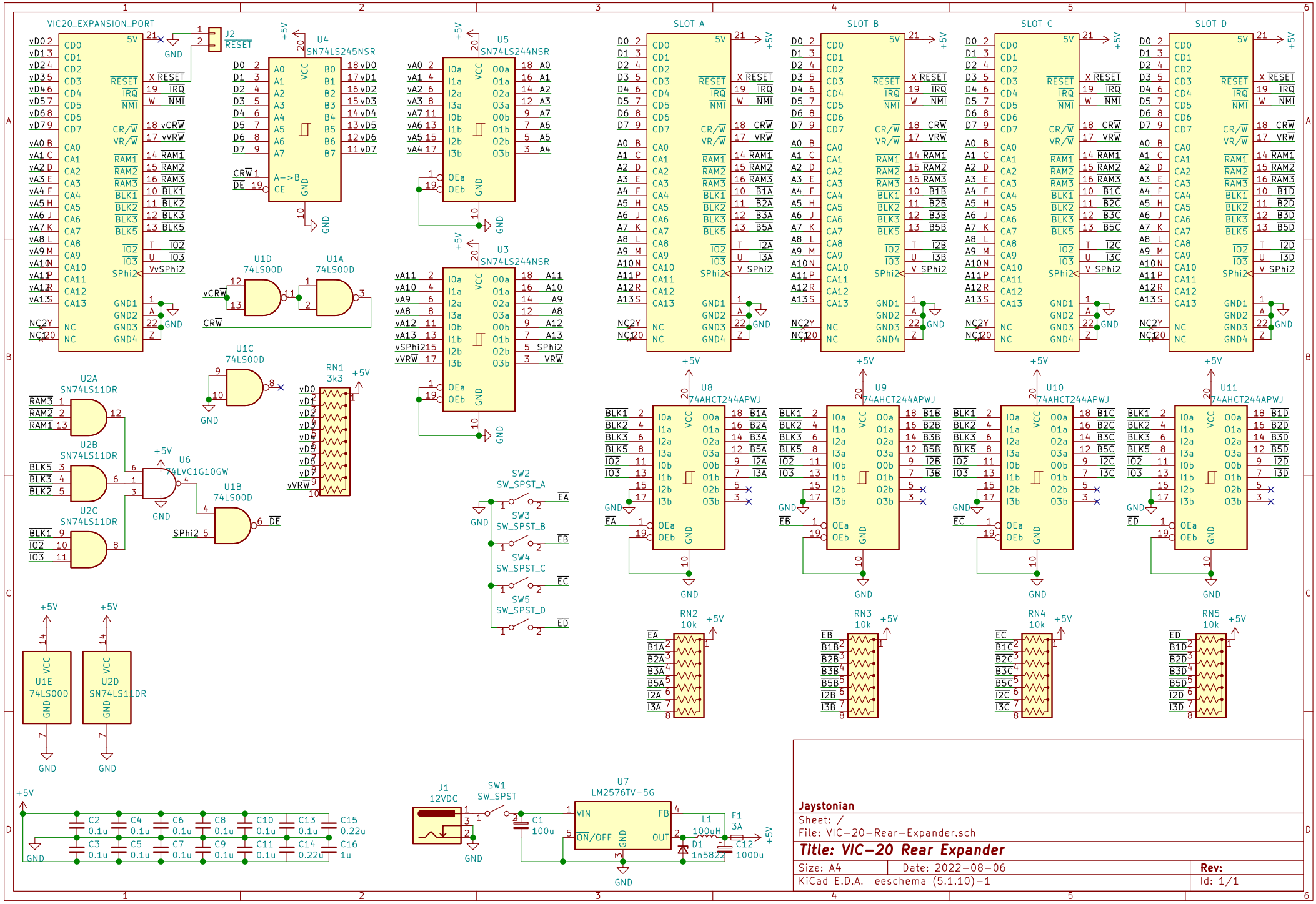

Jaystonian

Sheet: /

File: VIC-20-Rear-Expander.sch

Title: VIC-20 Rear Expander

Size: A4	Date: 2022-08-06	Rev:
KiCad E.D.A. eeschema (5.1.10)-1		Id: 1/1