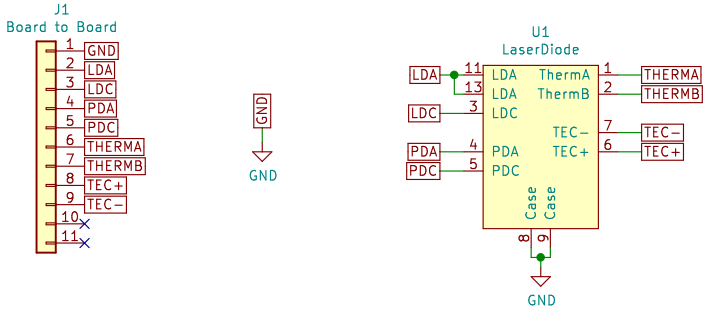

Rev 4.0 and 4.1 are identical – just a silk screen bump

850 South Lincoln St.
Siloam Springs, AR 72761
(479) 427-0299
**Leeman Geophysical LLC**

LEEMANGEOPHYSICAL LLC
CONSULTING & INSTRUMENTATION

Sheet: /
File: laser_mount_board.sch

**Title: OFMI Laser Mount Board**

| | | |
|---|---|---|
| Size: A4 | Date: 2020-09-11 | **Rev: 4.1** |
| KiCad E.D.A. kicad (5.1.5)-3 | | Id: 1/1 |