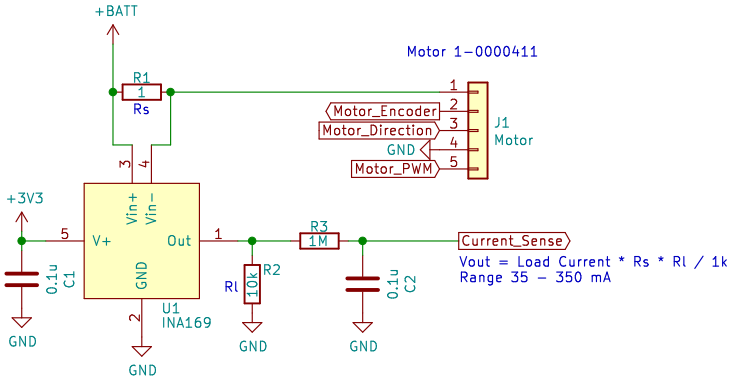

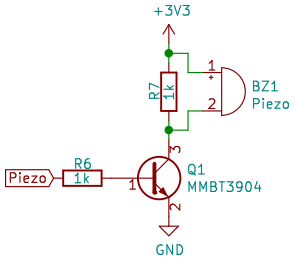

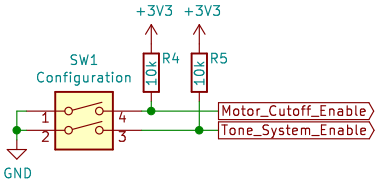

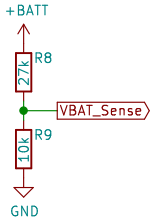

Sheet: microcontroller

File: microcontroller.sch

Sheet: Power

File: Power.sch

FID1 Fiducial
FID2 Fiducial
FID3 Fiducial
FID4 Fiducial
H1 MountingHole
H2 MountingHole
H3 MountingHole
H4 MountingHole

850 South Lincoln St.
Siloam Springs, AR 72761
(479) 373-3736
Leeman Geophysical LLC

LEEMANGEOPHYSICAL LLC
CONSULTING & INSTRUMENTATION

Sheet: /
File: motor_control.sch

Title: Motor Paddle Electronics - NSSL EFM

Size: A4	Date: 2019-12-03	**Rev: 1.0**
KiCad E.D.A. kicad (5.1.4)-1		Id: 1/3

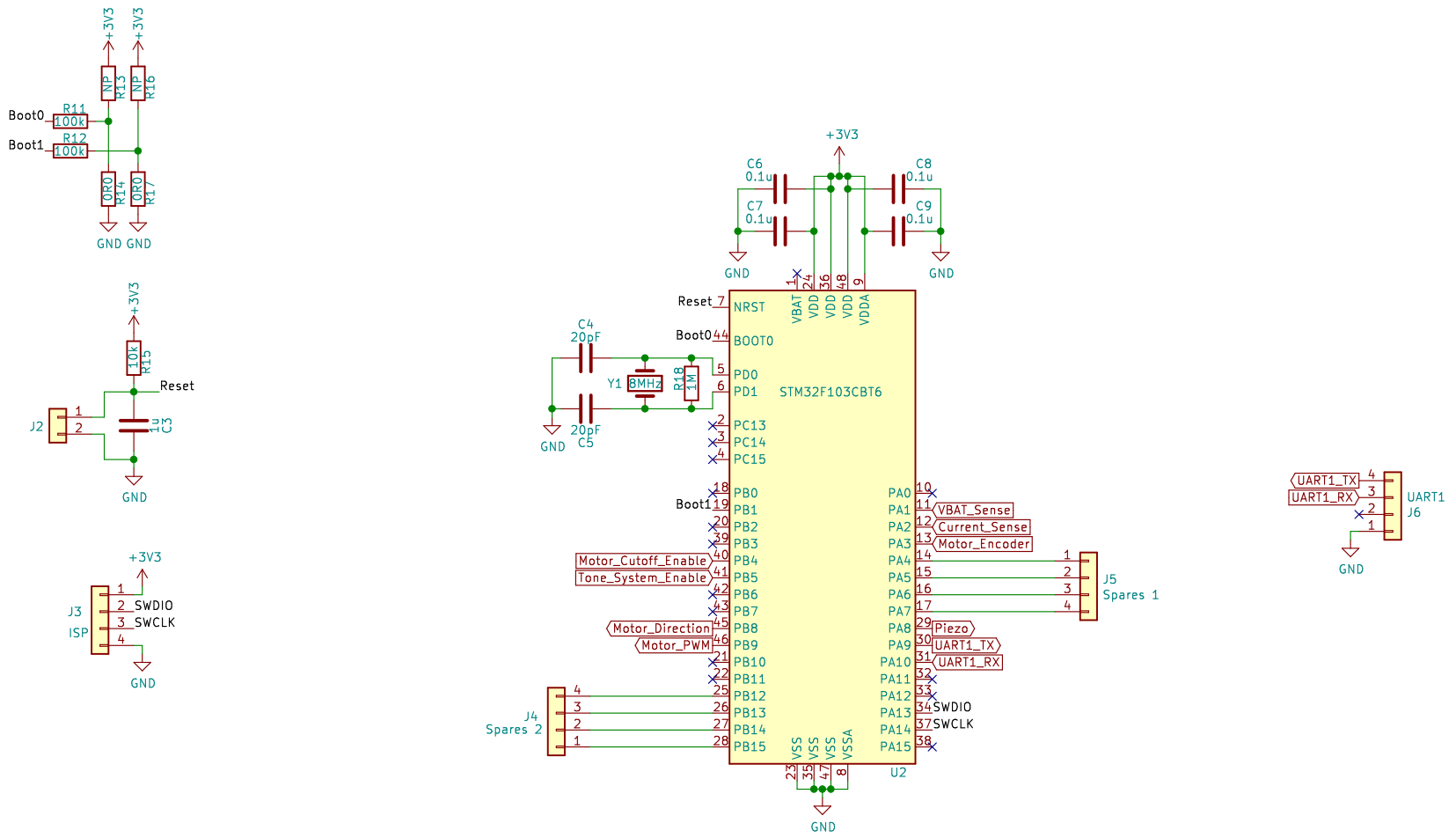

850 South Lincoln St.
Siloam Springs, AR 72761
(479) 373-3736
Leeman Geophysical LLC

LEEMANGEOPHYSICAL LLC
CONSULTING & INSTRUMENTATION

Sheet: /microcontroller/
File: microcontroller.sch

Title: Motor Paddle Electronics – NSSL EFM

Size: A4	Date: 2019-12-03	**Rev: 1.0**
KiCad E.D.A. kicad (5.1.4)-1		Id: 2/3

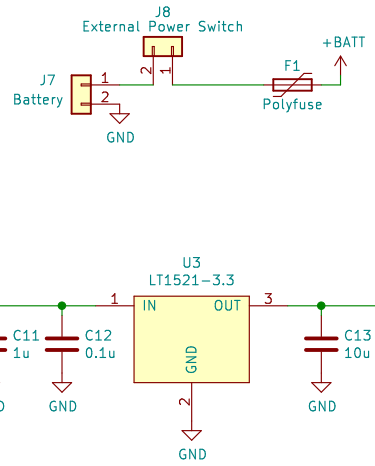

850 South Lincoln St.
Siloam Springs, AR 72761
(479) 373-3736
Leeman Geophysical LLC

LEEMANGEOPHYSICAL LLC
CONSULTING & INSTRUMENTATION

Sheet: /Power/
File: Power.sch

Title: Motor Paddle Electronics – NSSL EFM

Size: A4	Date: 2019-12-03	**Rev: 1.0**
KiCad E.D.A. kicad (5.1.4)-1		Id: 3/3