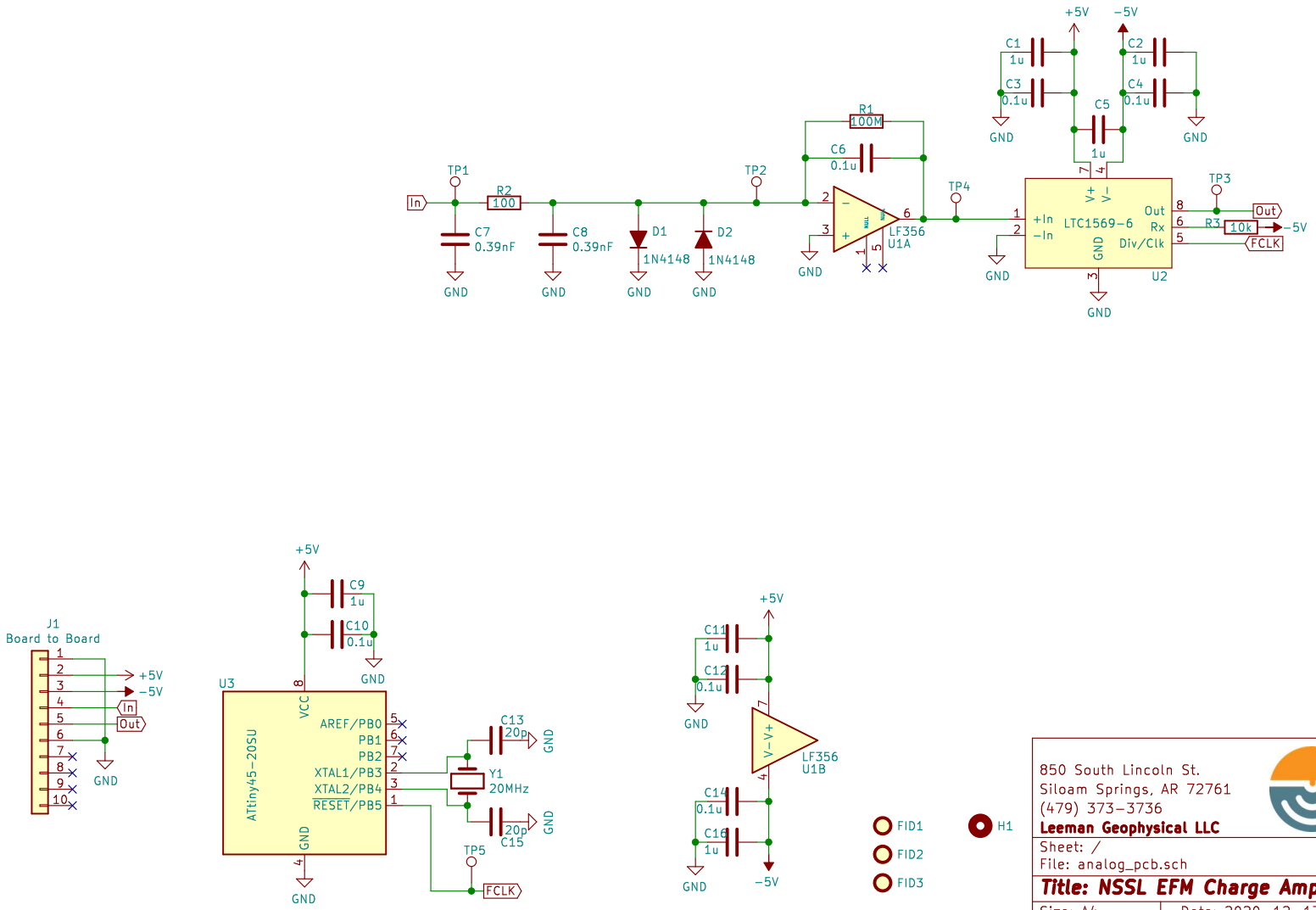

850 South Lincoln St.
Siloam Springs, AR 72761
(479) 373-3736
Leeman Geophysical LLC

LEEMANGEOPHYSICAL LLC
CONSULTING & INSTRUMENTATION

Sheet: /
File: analog_pcb.sch

Title: NSSL EFM Charge Amplifier

Size: A4	Date: 2020-12-17	**Rev: 2.0**
KiCad E.D.A. kicad (5.1.7)-1		Id: 1/1