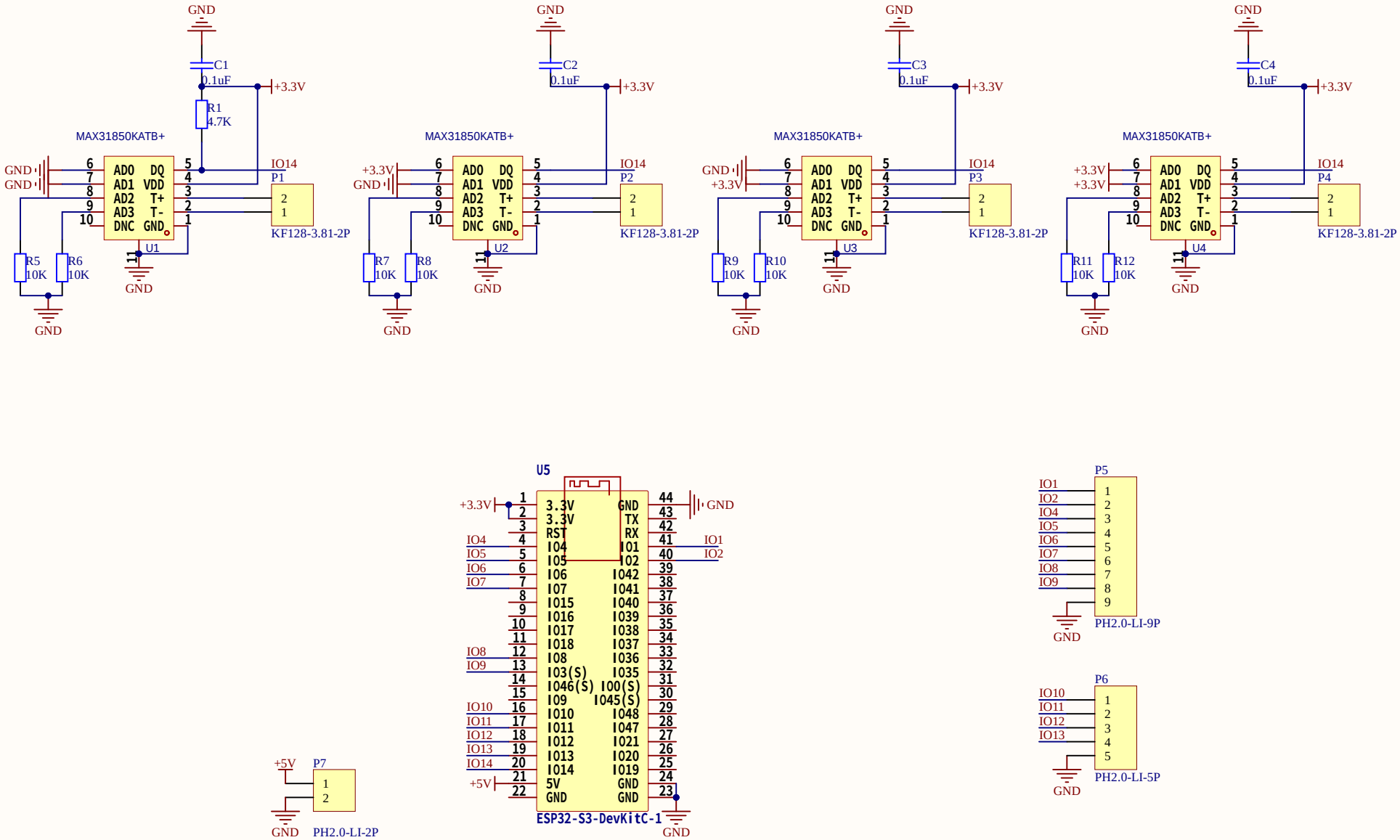

Title		
Size A4	Number	Revision
Date: 3/27/2026		Sheet of
File: C:\Users\..\ESP32-S3-DevKitC-1主控.SchDoc		Drawn By: