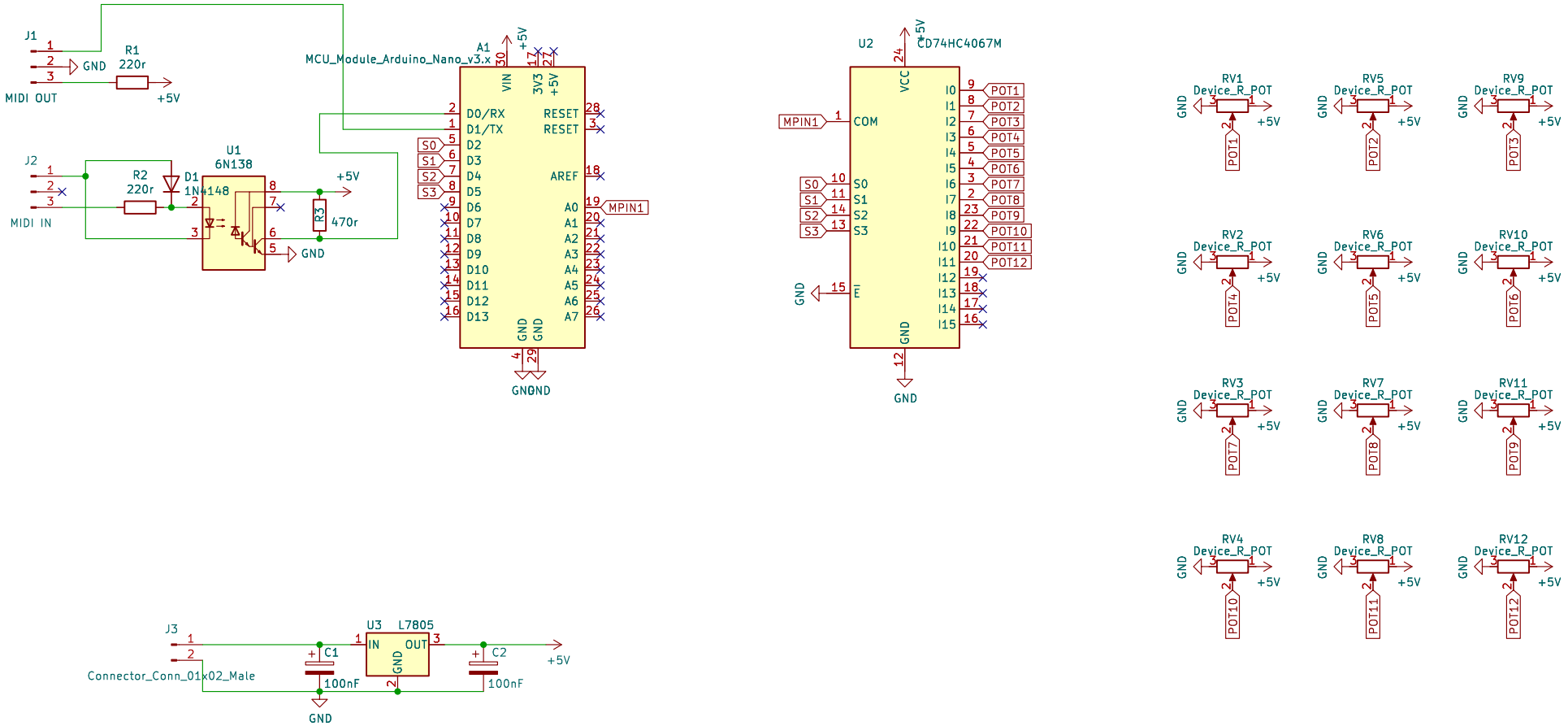

C1 wrong value on PCB (AMOK SYNTH KNOB MUSIC PCB _ JLCPCB.zip) 08/05/2023
Check for rev B soon

C2 not present on PCB

Sheet: /
File: AMOK SYNTH KNOB MUSIC PCB.kicad_sch

Title: AMOK SYNTH KNOB MUSIC

Size: A4	Date: 2023-06-06	**Rev: A**
KiCad E.D.A. kicad 7.0.2		Id: 1/1