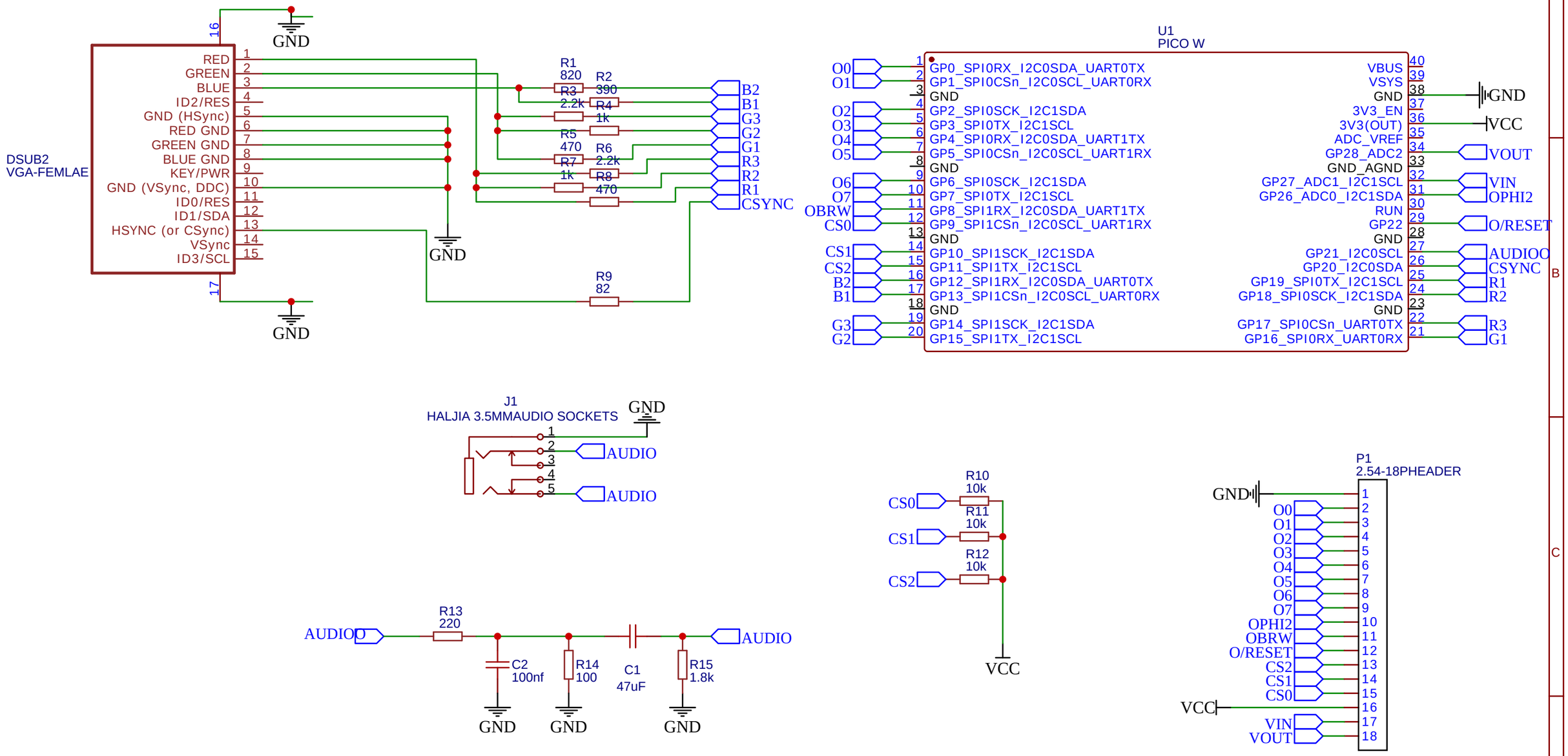


| | |
|---|---|
| TITLE: Sheet_1 | REV: 1.0 |
| Company: Your Company | Sheet: 1/1 |
| Date: 2023-12-03 Drawn By: harvengtjeanmarc | |

EasyEDA