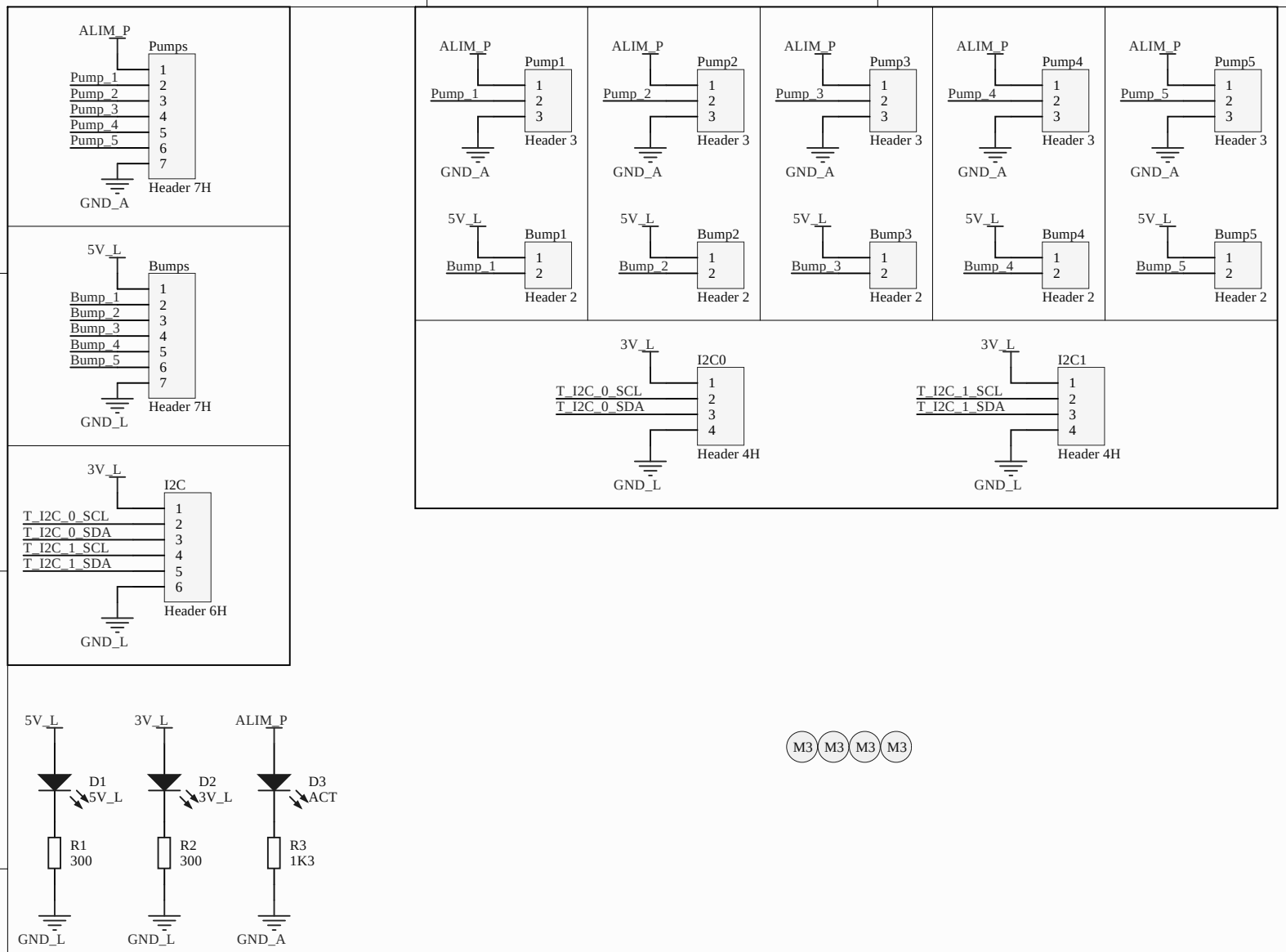

Title	Carte Gros Robot Split	
Size A4	Number	Revision V 1.0
Date: 21/04/2021		Sheet of
File: D:\Robot\..\GR_Split.SchDoc		Drawn By:

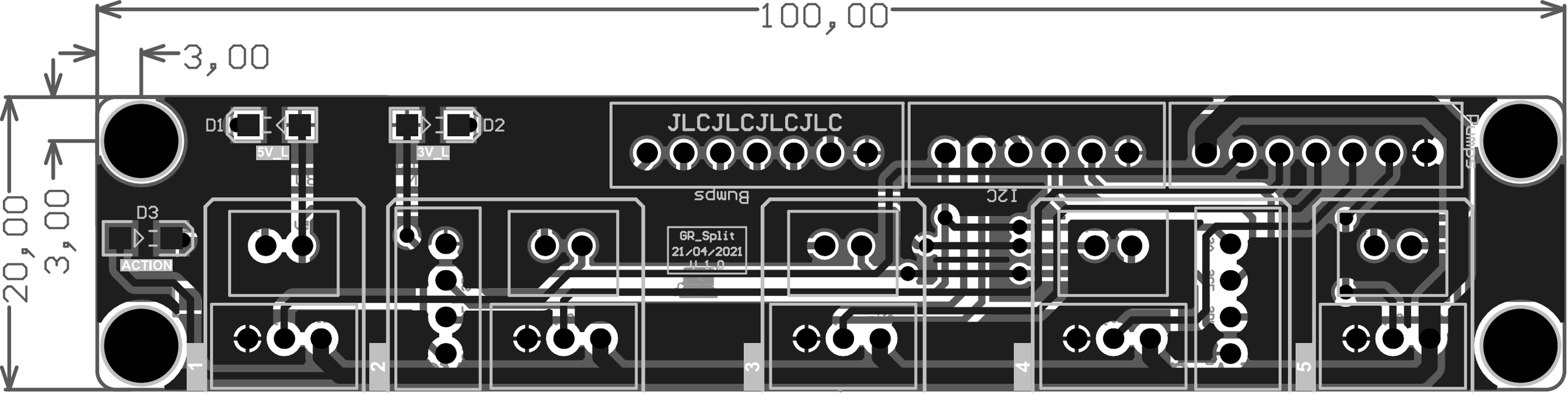
100,00
3,00
20,00
3,00
D1
5V_L
D2
3V_L
D3
ACTION
JLCJLCJLCJLC
Bumps
I2C
GR_Split
21/04/2021
1
2
3
4
5

D1
5V_L
D2
3V_L
D3
ACTION
Bumps
I2C
GR_Split
21/04/2021
V 1.0
2
3
4
5