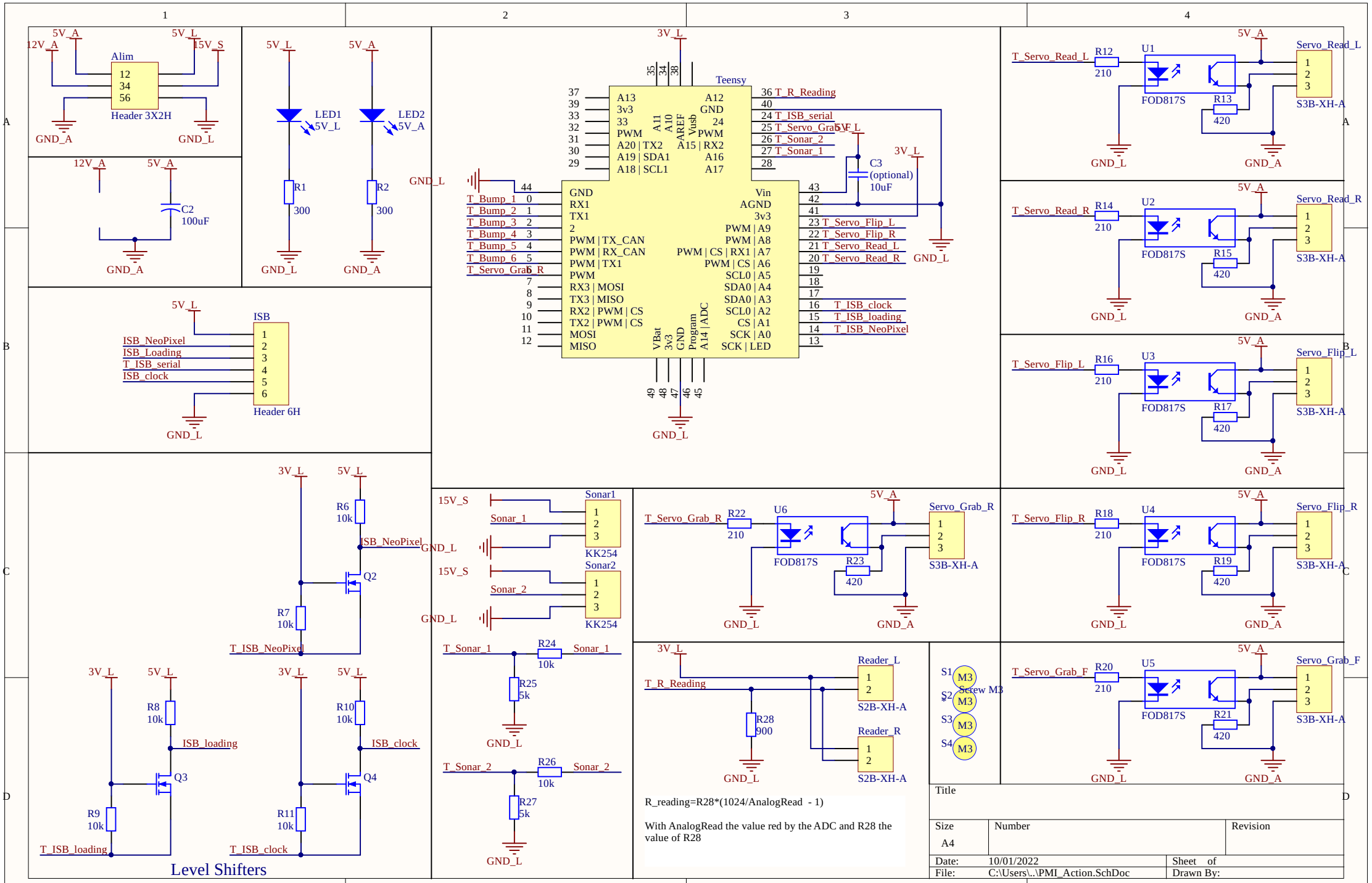
Alim
Header 3X2H
12V_A
5V_A
5V_L
15V_S
GND_A
GND_L
C2
100uF
LED1
LED2
R1
300
R2
300
ISB
Header 6H
ISB_NeoPixel
ISB_Loading
T_ISB_serial
ISB_clock
Teensy
3V_L
T_R_Reading
T_ISB_serial
T_Servo_Grab_F
T_Sonar_2
T_Sonar_1
C3
(optional)
10uF
T_Bump_1
T_Bump_2
T_Bump_3
T_Bump_4
T_Bump_5
T_Bump_6
T_Servo_Grab_R
T_Servo_Flip_L
T_Servo_Flip_R
T_Servo_Read_L
T_Servo_Read_R
T_ISB_clock
T_ISB_loading
T_ISB_NeoPixel
Sonar1
Sonar2
KK254
15V_S
Sonar_1
Sonar_2
R24
10k
R25
5k
R26
10k
R27
5k
R6
10k
R7
10k
Q2
R8
10k
R9
10k
Q3
R10
10k
R11
10k
Q4
ISB_NeoPixel
ISB_loading
ISB_clock
Level Shifters
Reader_L
Reader_R
S2B-XH-A
R28
900
R_reading=R28*(1024/AnalogRead - 1)
With AnalogRead the value red by the ADC and R28 the value of R28
Screw M3
Servo_Read_L
Servo_Read_R
Servo_Flip_L
Servo_Flip_R
Servo_Grab_R
Servo_Grab_F
S3B-XH-A
FOD817S
U1
U2
U3
U4
U5
U6
R12
R13
R14
R15
R16
R17
R18
R19
R20
R21
R22
R23
210
420
Title
Size
A4
Number
Revision
Date: 10/01/2022
Sheet of
File: C:\Users\..\PMI_Action.SchDoc
Drawn By: