ECE 2011
Introduction to Computer Engineering
Spring 2026

Lecture 9
02-10-2026

Linghao Song
Yale ECE

A Weird Weather Light System

I have a weird weather light system. The system monitors weathers of four cities, New Haven, New York, Boston, and Springfield. There are two lights, a green light and a blue light. The green light will be on if one day ago three or four of the cities were sunny, otherwise, off. The blue light will be on only if two days ago there was only one city was sunny.

Green Light FSM

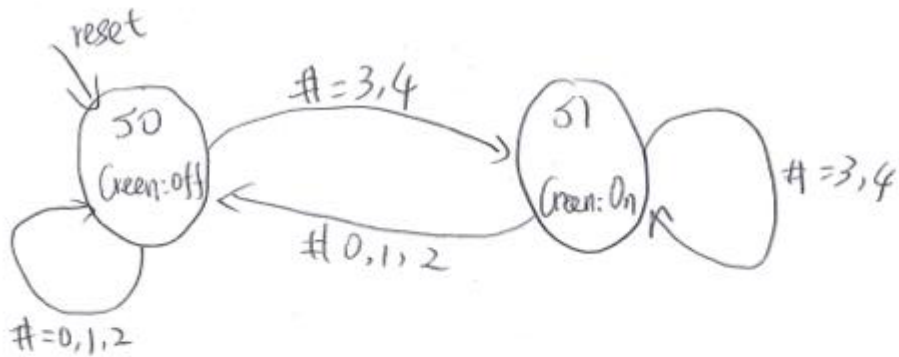

Blue Light FSM

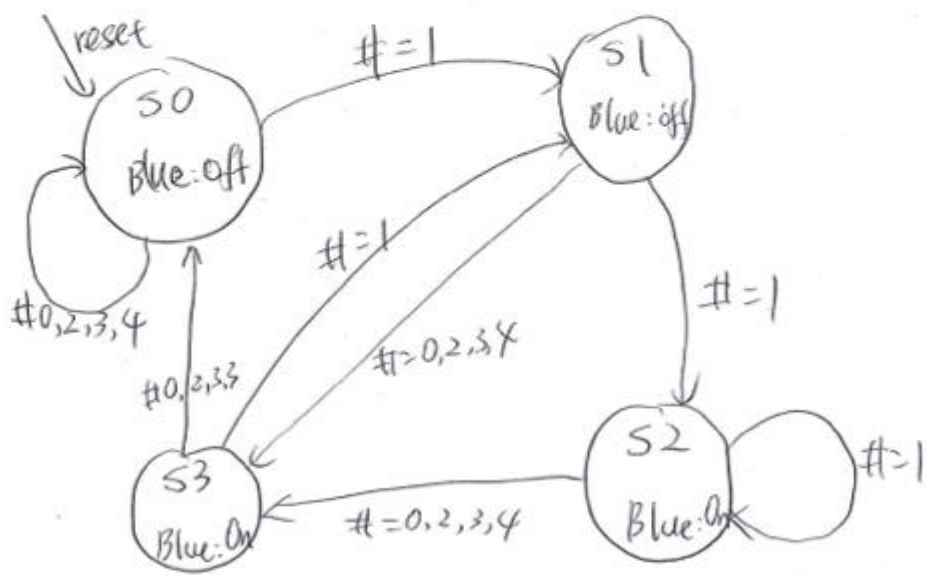

Green FSM

current state	input ~~NYBS~~	next state
S0 /00	0,1,2	S0 /0
S0 /00	3,4	S1 /1
S1 /1	0,1,2	S0 /0
S1 /1	3,4	S1 /1

~~0,1,2 = $\bar{N}\bar{Y}\bar{B}\bar{S}$ +~~ C 3,4 = ~~$\bar{Y}\bar{B}\bar{S}$ +~~ $N\bar{Y}B + \bar{Y}BS + N\bar{Y}S + NBS$

$\bar{C}$ = 0,1,2, = $\overline{3,4}$

Blue

current state	input	next state
S0 /00	0,2,3,4	S0 /00
S0 /00	1	S1 /01
S1 /01	0,2,3,4	S3 /11
S1 /01	1	S2 /10
S2 /10	0,2,3,4	S3 /11
S2 /10	1	S1 /01
S3 /11	0,2,3,4	S0 /00
S3 /11	1	S1 /01

C, #1 = $N\bar{Y}\bar{B}\bar{S} + \bar{N}\bar{Y}\bar{B}\bar{S} + \bar{N}\bar{Y}\bar{B}\bar{S} + \bar{N}\bar{Y}\bar{B}S$

$\bar{C}$, #0,2,3,4

Green FSM / output table

Current State	Output
S0 /0	Green : off
S1 /1	Green : On

Blue FSM

current state	output
S0	Blue : off
S1	Blue : off
S2	Blue : On
S3	Blue : On

Green FSM

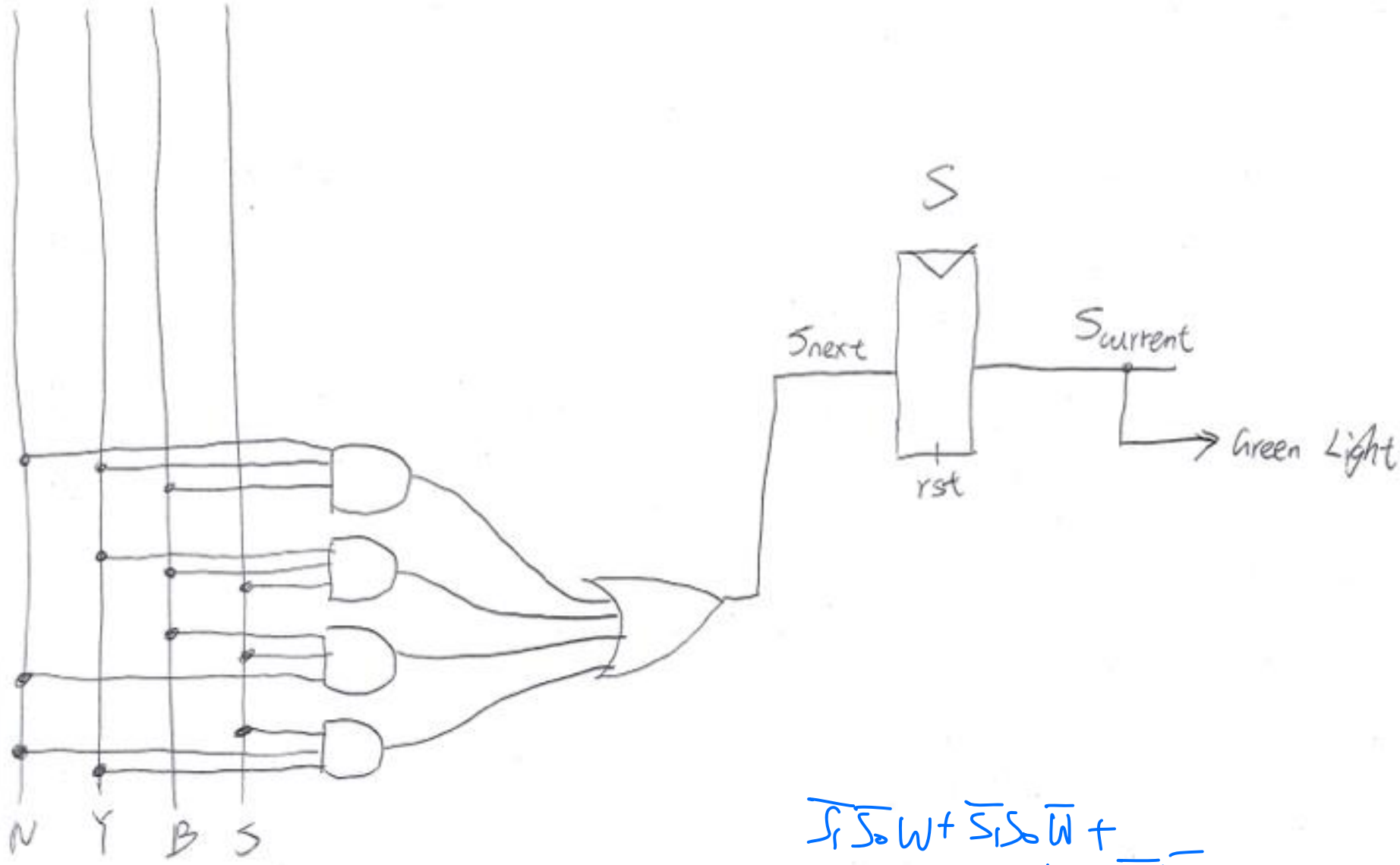

$\overline{S_1}\,\overline{S_0}\,W + \overline{S_1}\,S_0\,\overline{W} +$
$S_1 S_0 W + S_1\,\overline{S_0}\,\overline{W}$

Blue FSM

conditional

$S_1(next)$ \ S_1S_0 current (current state)	W = 0	W = 1
00		
01	1	1
11		
10	1	1

$S_{next} = \bar{S}_1 S_{0\,current} + S_1 \bar{S}_{0\,current}$

$S_1(next) = \bar{S}_1 S_0(current) + S_1 \bar{S}_0(current) \bar{W}$

$S_0(next)$ \ S_1S_0 (current)	W = 0	W = 1
00		1
01	1	
11		1
10	1	1

$S_0(next) = S_1 \bar{S}_0(current) + S_1(current) W + \bar{S}_0(current) W + \bar{S}_1 S_0(current) \bar{W}$

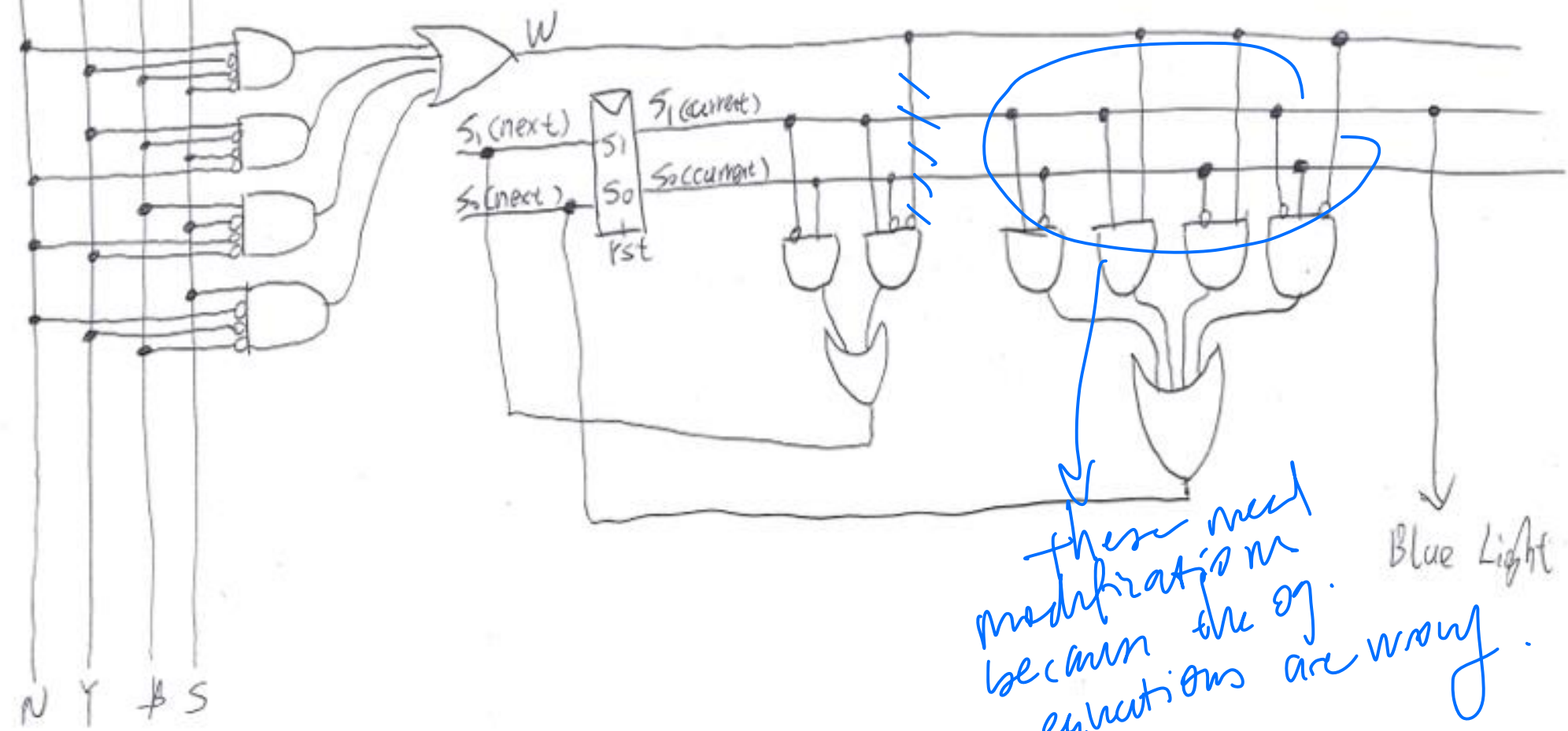

these need modification because the eq. equations are wrong.

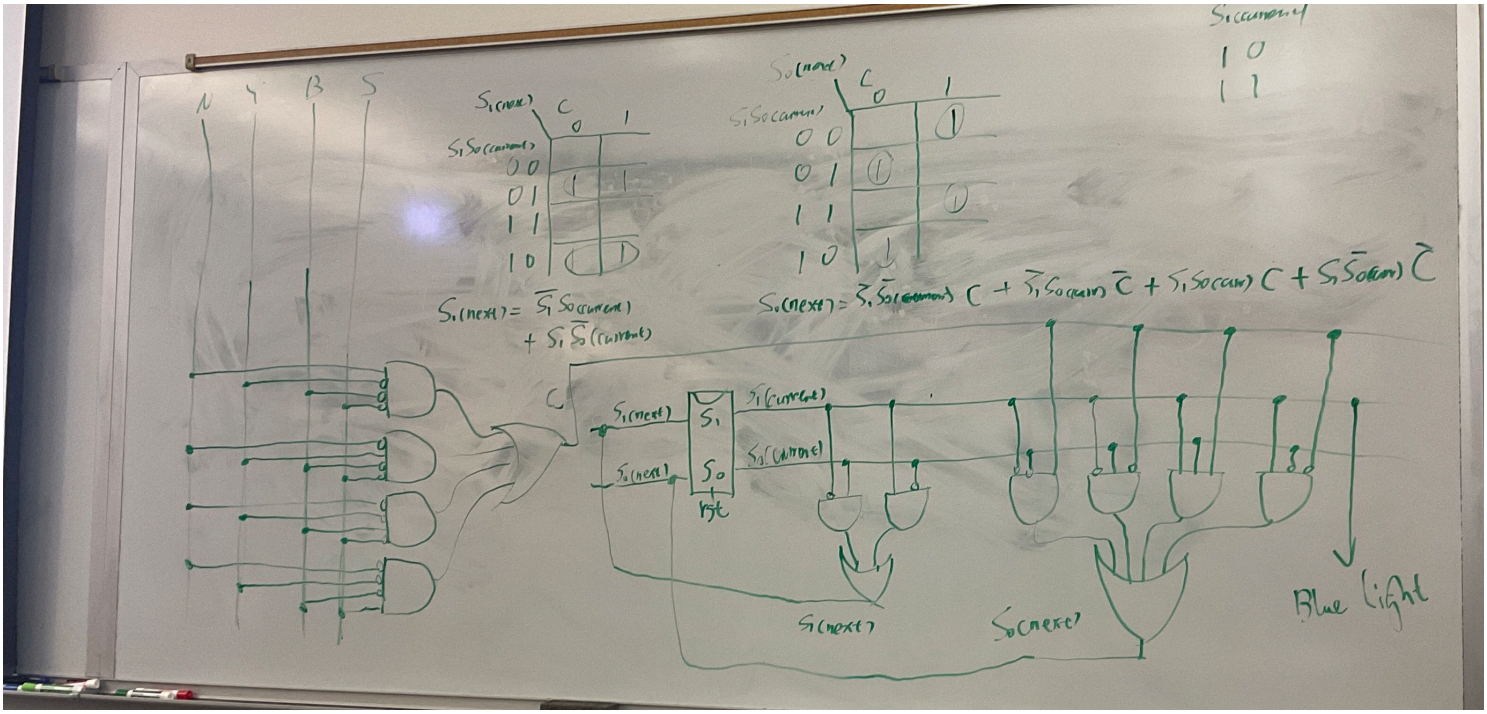
N
Y
B
S
S1(next)
C
0
1
S1S0(current)
0 0
0 1
1 1
1 0
S0(next)
C
0
1
S1S0(current)
0 0
0 1
1 1
1 0
S1(next) = S̄1 S0(current) + S1 S̄0(current)
S0(next) = S̄1 S̄0(current) C + S̄1 S0(current) C̄ + S1 S0(current) C + S1 S̄0(current) C̄
C
S1(next)
S0(next)
S1
S0
Rst
S1(current)
S0(current)
S1(next)
S0(next)
Blue light

FSM Design Procedure

1. Identify **inputs** and **outputs**
2. Sketch **state transition diagram**
3. Write **state transition table, output table**
4. Select **state(input, output) encodings**
5. For Moore machine:
    1. Rewrite state transition table with state **encodings**
    2. Write **output table**
6. Write **Boolean equations** for next state and output logic
7. Sketch the circuit **schematic**

© *Digital Design and Computer Architecture*, 2nd Edition, 2012

ELSEVIER

Timing (Combinational)

- **Delay** between input change and output changing
- How to build fast circuits?

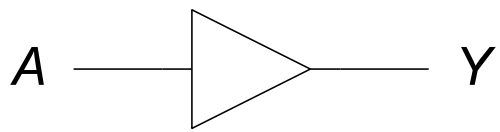

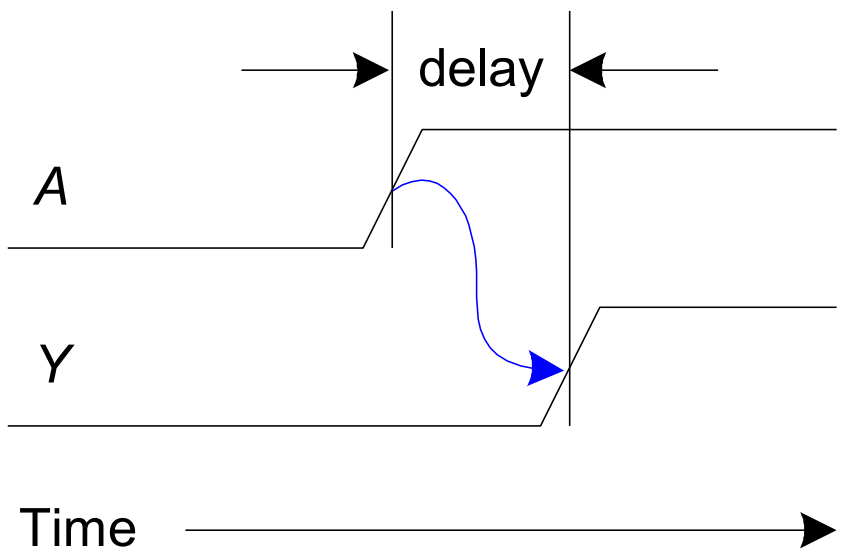

© *Digital Design and Computer Architecture*, 2nd Edition, 2012

ELSEVIER

Propagation & Contamination Delay

after t_{pd}, output becomes stable.

- **Propagation delay:** t_{pd} = max delay from input to output
- **Contamination delay:** t_{cd} = min delay from input to output

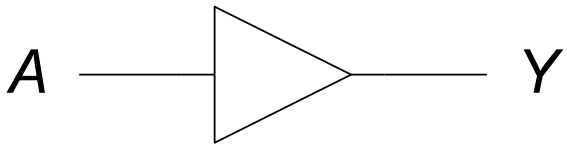

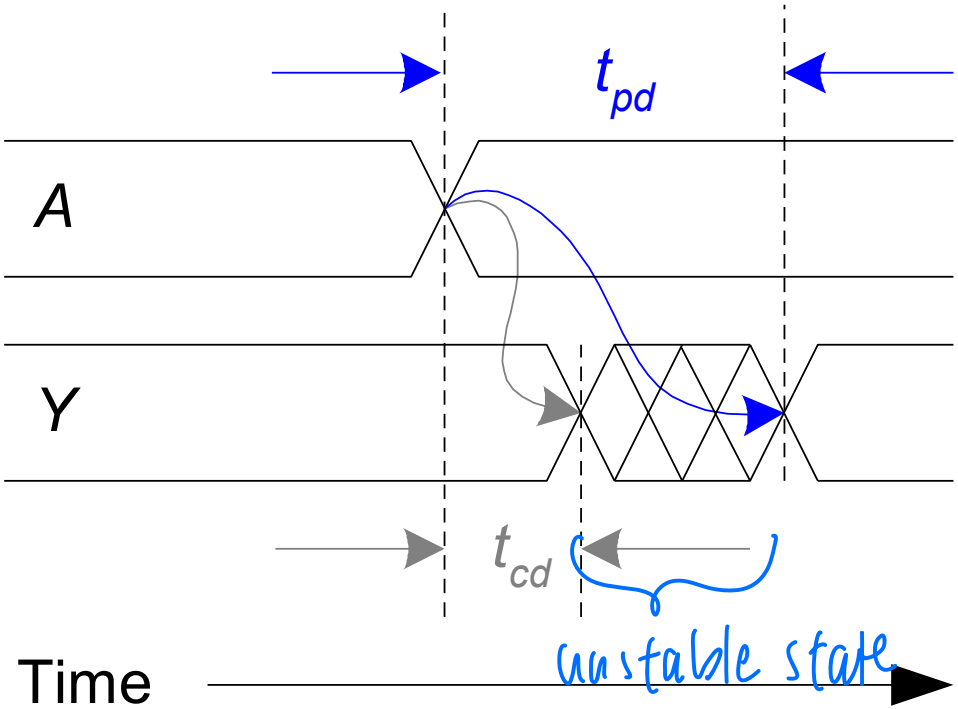

© *Digital Design and Computer Architecture*, 2nd Edition, 2012

ELSEVIER

Propagation & Contamination Delay

- **Delay is caused by**
  - Capacitance and resistance in a circuit
- **Reasons why t_{pd} and t_{cd} may be different:**
  - Different rising and falling delays
  - Multiple inputs and outputs, some of which are faster than others
  - Circuits slow down when hot and speed up when cold

RC delay $\tau = RC$

© *Digital Design and Computer Architecture*, 2nd Edition, 2012

ELSEVIER

Critical (Long) & Short Paths

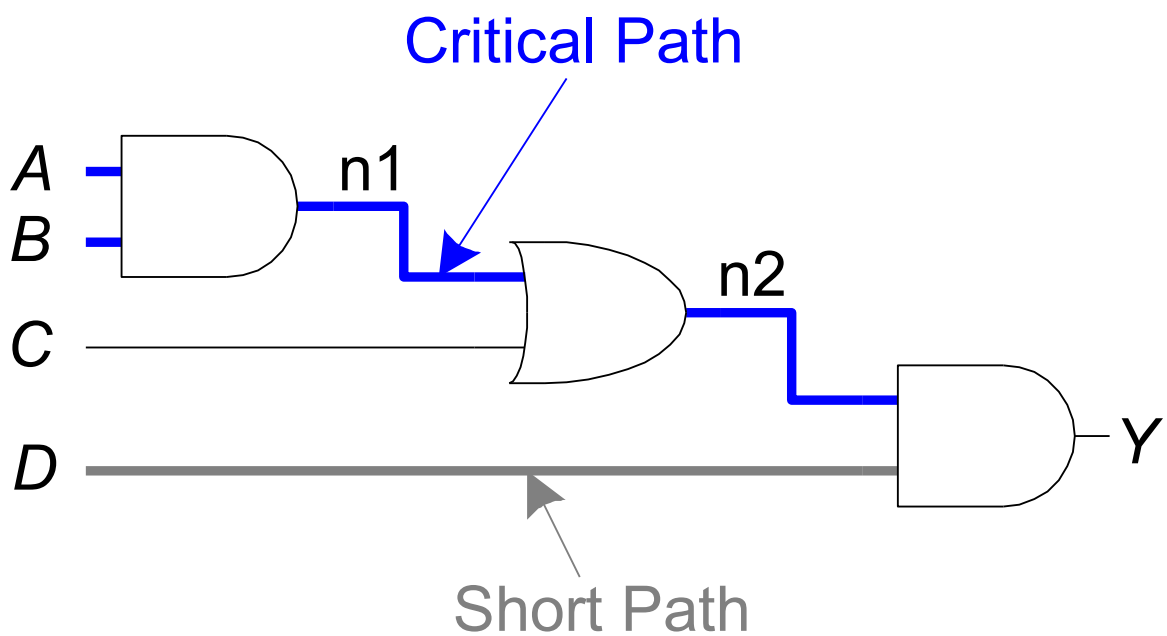

Critical (Long) Path: $t_{pd} = 2t_{pd_AND} + t_{pd_OR}$

Short Path: $t_{cd} = t_{cd_AND}$

© *Digital Design and Computer Architecture*, 2nd Edition, 2012

Timing (Sequential)

- Flip-flop samples *D* at clock edge
- *D* must be stable when sampled
- Similar to a photograph, *D* must be stable around clock edge
- If not, metastability can occur

© *Digital Design and Computer Architecture*, 2nd Edition, 2012

ELSEVIER

Input Timing Constraints

- **Setup time:** t_{setup} = time *before* clock edge data must be stable (i.e. not changing)
- **Hold time:** t_{hold} = time *after* clock edge data must be stable
- **Aperture time:** t_a = time *around* clock edge data must be stable ($t_a = t_{setup} + t_{hold}$)

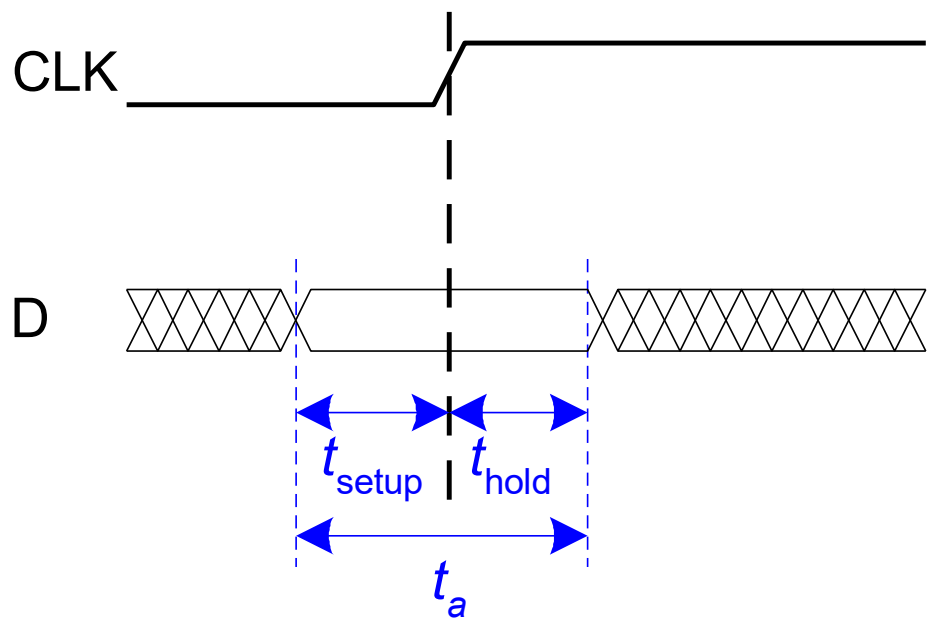

© *Digital Design and Computer Architecture*, 2nd Edition, 2012

ELSEVIER

Output Timing Constraints

- **Propagation delay:** t_{pcq} = time after clock edge that the output *Q* is guaranteed to be stable (i.e., to stop changing)
- **Contamination delay:** t_{ccq} = time after clock edge that *Q* might be unstable (i.e., start changing)

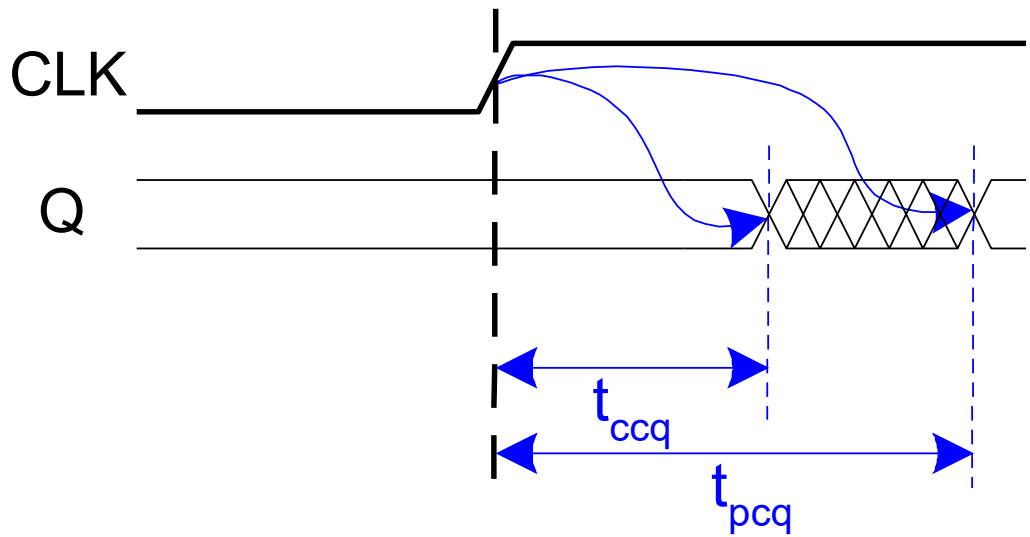

© *Digital Design and Computer Architecture*, 2nd Edition, 2012

Dynamic Discipline

- Synchronous sequential circuit inputs must be stable during aperture (setup and hold) time around clock edge
- Specifically, inputs must be stable
  - at least t_{setup} before the clock edge
  - at least until t_{hold} after the clock edge

© *Digital Design and Computer Architecture*, 2nd Edition, 2012

ELSEVIER

Dynamic Discipline

- The delay between registers has a **minimum** and **maximum** delay, dependent on the delays of the circuit elements

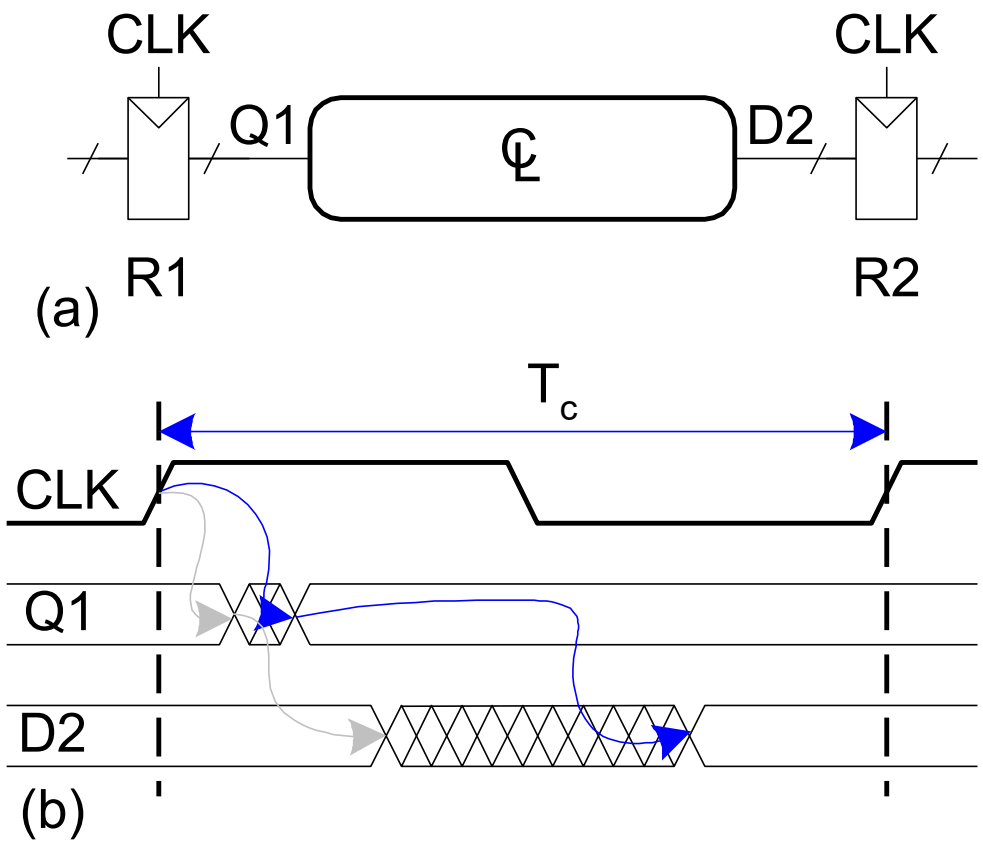

© *Digital Design and Computer Architecture*, 2nd Edition, 2012

Setup Time Constraint

- Depends on the **maximum** delay from register R1 through the combinational logic to R2
- The input to register R2 must be stable at least t_{setup} before clock edge

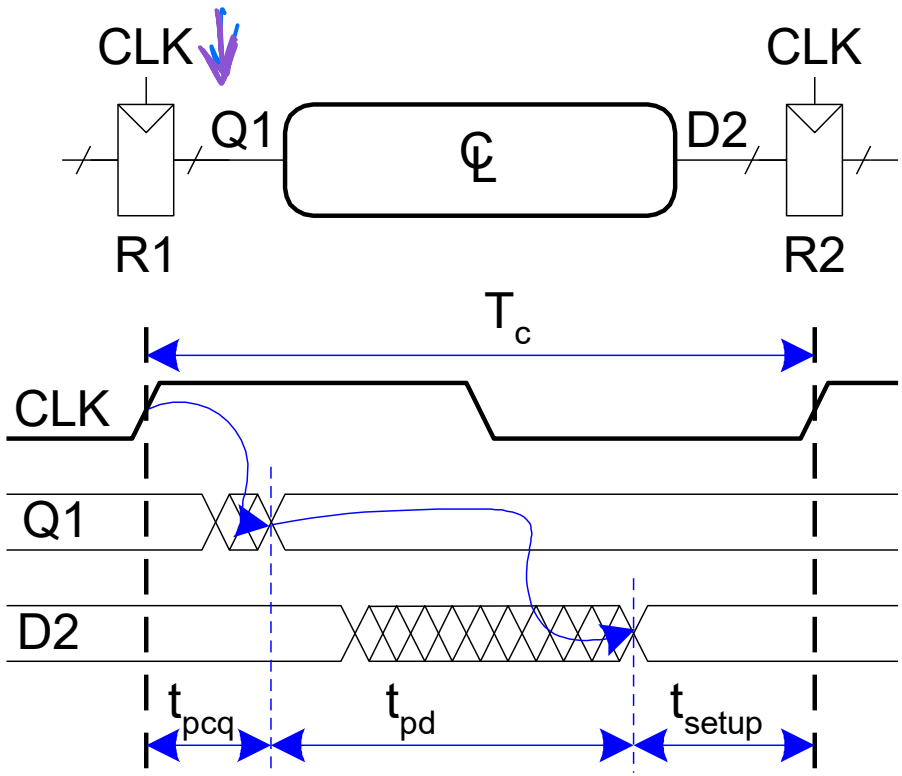

$$T_c \geq t_{pcq} + t_{pd} + t_{setup}$$

© *Digital Design and Computer Architecture*, 2nd Edition, 2012

ELSEVIER

Setup Time Constraint

- Depends on the **maximum** delay from register R1 through the combinational logic to R2
- The input to register R2 must be stable at least t_{setup} before clock edge

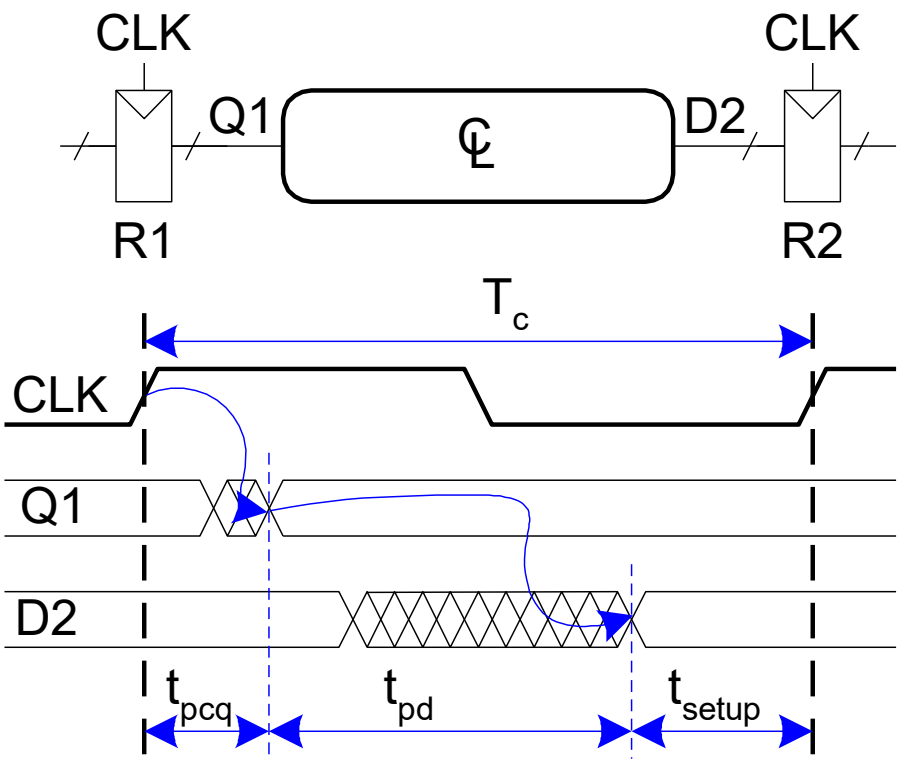

$$T_c \geq t_{pcq} + t_{pd} + t_{setup}$$

$$t_{pd} \leq$$

© Digital Design and Computer Architecture, 2nd Edition, 2012

ELSEVIER

Setup Time Constraint

- Depends on the **maximum** delay from register R1 through the combinational logic to R2
- The input to register R2 must be stable at least t_{setup} before clock edge

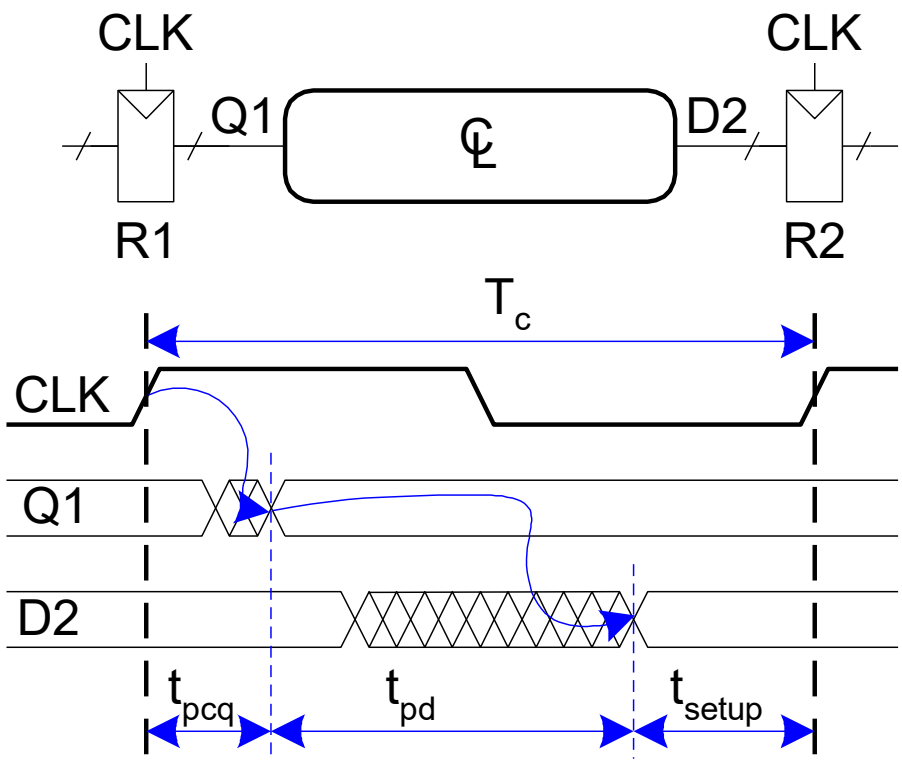

$$T_c \geq t_{pcq} + t_{pd} + t_{setup}$$

$$t_{pd} \leq T_c - (t_{pcq} + t_{setup})$$

We can't control this time.

$(t_{pcq} + t_{setup})$: *sequencing overhead*

© *Digital Design and Computer Architecture*, 2nd Edition, 2012

ELSEVIER

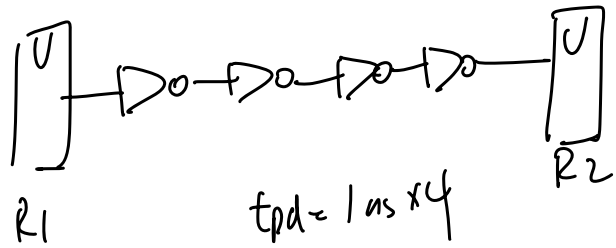

$t_{pd} = 1ns \times 4$

you can satisfy T_c constraint by inserting another register between the smaller piece.

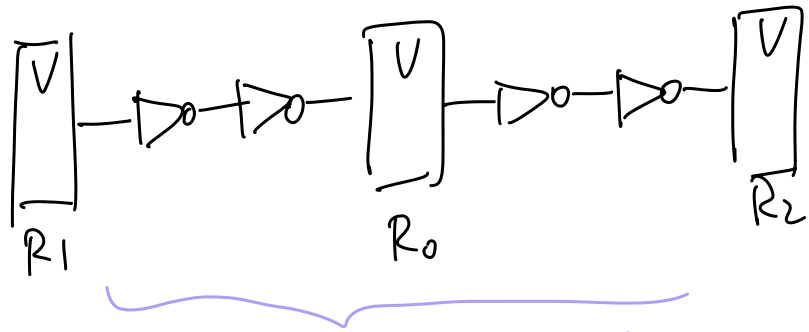

total circuit is faster because frequency is higher.

Hold Time Constraint

- Depends on the **minimum** delay from register R1 through the combinational logic to R2
- The input to register R2 must be stable for at least t_{hold} after the clock edge

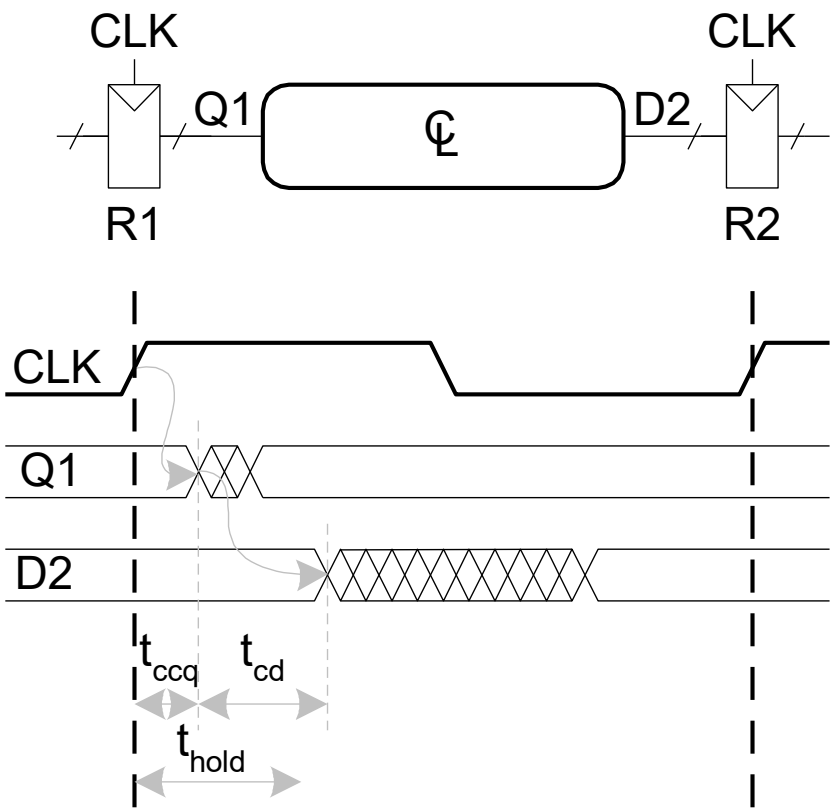

$t_{hold} <$
$t_{ccq} + t_{cd}$

© *Digital Design and Computer Architecture*, 2nd Edition, 2012

ELSEVIER

Hold Time Constraint

- Depends on the **minimum** delay from register R1 through the combinational logic to R2
- The input to register R2 must be stable for at least t_{hold} after the clock edge

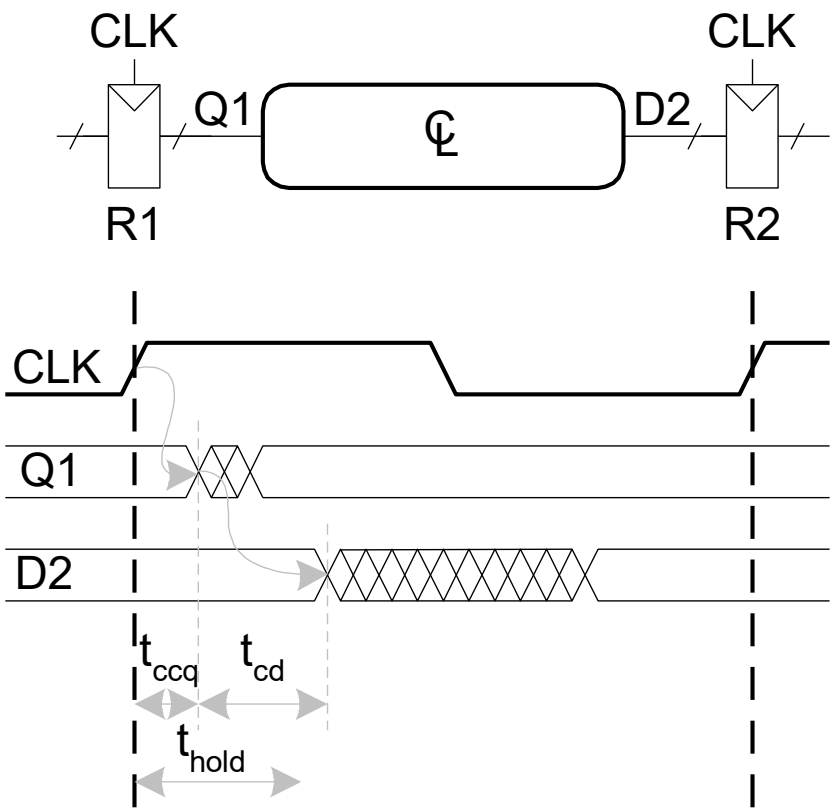

$$t_{hold} < t_{ccq} + t_{cd}$$

$$t_{cd} >$$

© *Digital Design and Computer Architecture*, 2nd Edition, 2012

ELSEVIER

Hold Time Constraint

- Depends on the **minimum** delay from register R1 through the combinational logic to R2
- The input to register R2 must be stable for at least t_{hold} after the clock edge

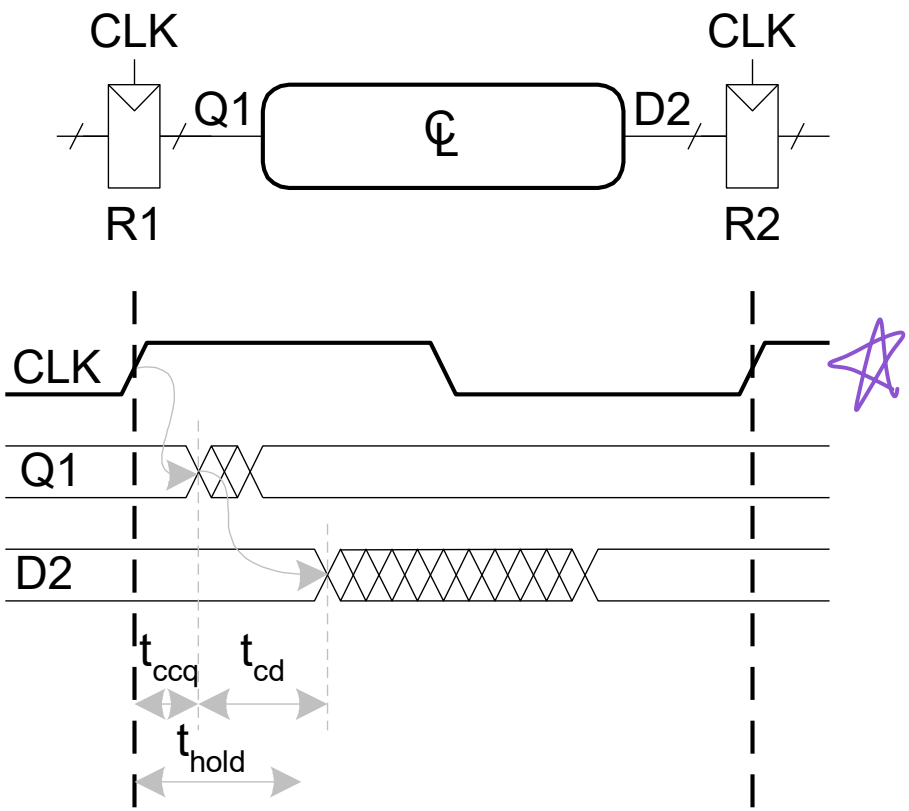

$$t_{hold} < t_{ccq} + t_{cd}$$

$$t_{cd} > t_{hold} - t_{ccq}$$

Usually, registers are designed that $t_{hold} = 0$, so we don't need to worry (unless there is a explicit $t_{hold} != 0$).

© Digital Design and Computer Architecture, 2nd Edition, 2012

ELSEVIER

Timing Analysis

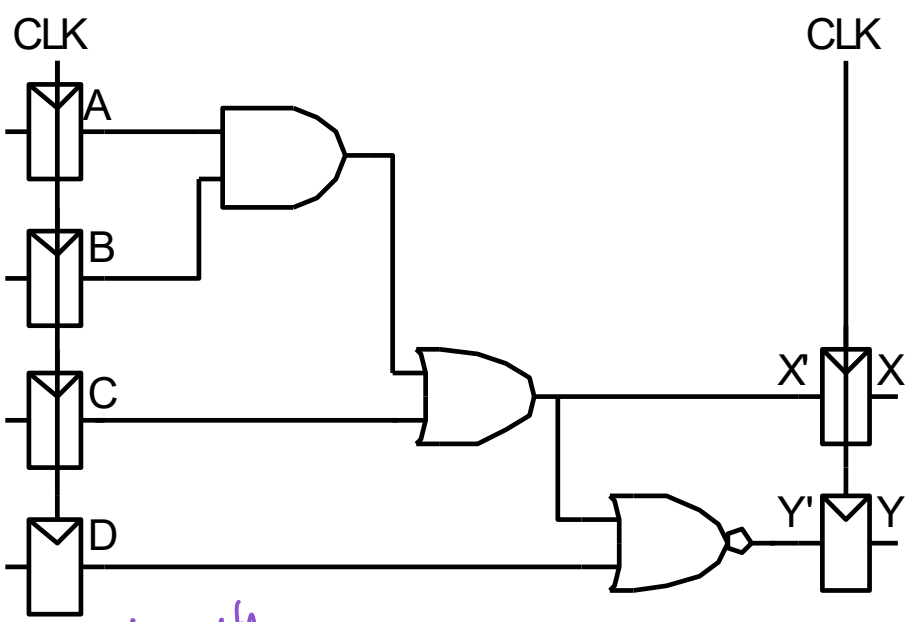

longest path

t_{pd} = 35 ps × 3 = 105 ps.

t_{cd} = 25 ps.

shortest path

Timing Characteristics

t_{ccq} = 30 ps

t_{pcq} = 50 ps

t_{setup} = 60 ps

t_{hold} = 70 ps

per gate

t_{pd} = 35 ps

t_{cd} = 25 ps

Setup time constraint:

$T_c \geq$ $t_{pcq} + t_{pd} + t_{setup} = 50 + 105 + 60$
$= 215$ ps.

$f_c = \frac{1}{T_c} = 4.15$ GHz

Hold time constraint:

$t_{ccq} + t_{cd} > t_{hold}$?

© *Digital Design and Computer Architecture*, 2nd Edition, 2012

ELSEVIER

Timing Analysis

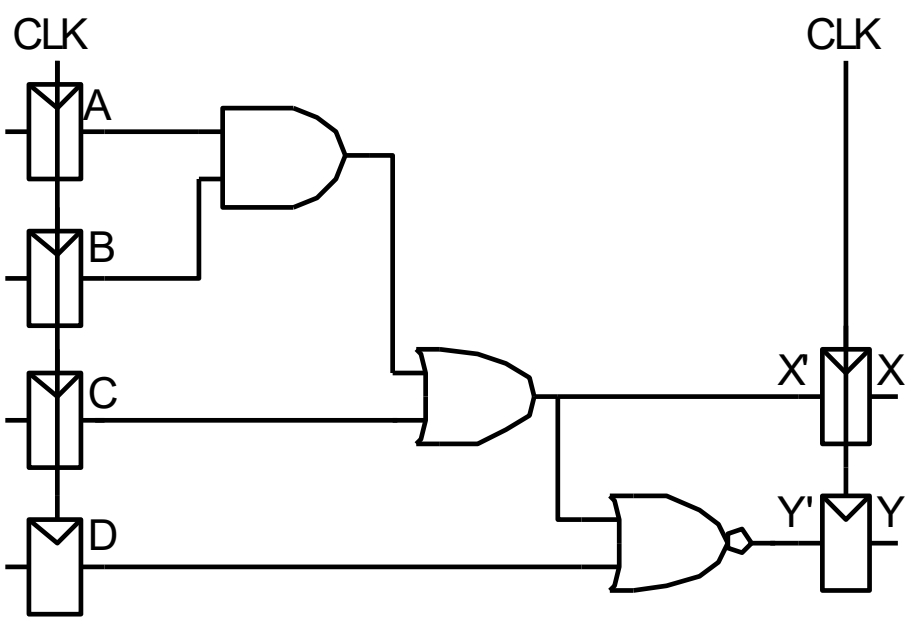

Timing Characteristics

t_{ccq} = 30 ps

t_{pcq} = 50 ps

t_{setup} = 60 ps

t_{hold} = 70 ps

per gate

t_{pd} = 35 ps

t_{cd} = 25 ps

t_{pd} = 3 x 35 ps = 105 ps

t_{cd} = 25 ps

Setup time constraint:

$T_c \geq (50 + 105 + 60)$ ps = 215 ps

$f_c = 1/T_c$ = 4.65 GHz

Hold time constraint:

$t_{ccq} + t_{cd} > t_{hold}$?

(30 + 25) ps > 70 ps ? **No!**

© *Digital Design and Computer Architecture*, 2nd Edition, 2012

ELSEVIER

Timing Analysis

Add buffers to the short paths:

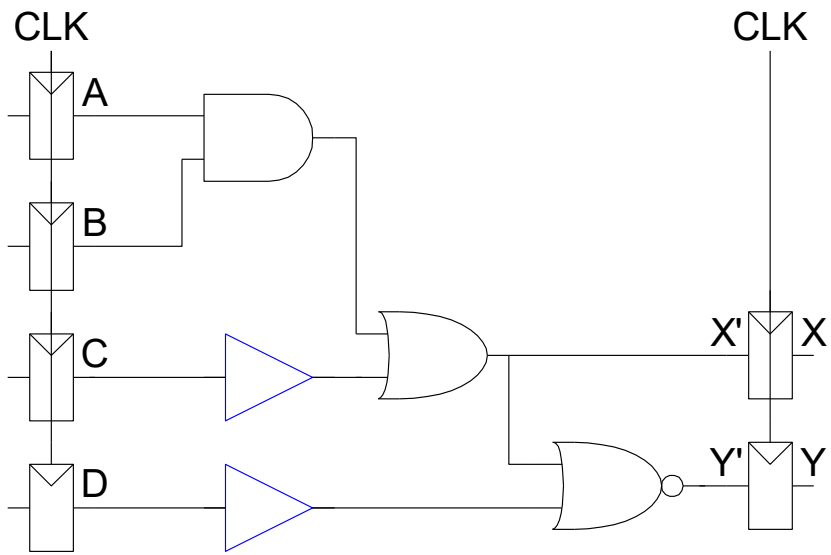

Timing Characteristics

t_{ccq} = 30 ps

t_{pcq} = 50 ps

t_{setup} = 60 ps

t_{hold} = 70 ps

per gate

t_{pd} = 35 ps

t_{cd} = 25 ps

t_{pd} =

t_{cd} =

Setup time constraint:

$T_c \geq$

f_c =

Hold time constraint:

$t_{ccq} + t_{cd} > t_{hold}$?

© *Digital Design and Computer Architecture*, 2nd Edition, 2012

ELSEVIER

Timing Analysis

Add buffers to the short paths:

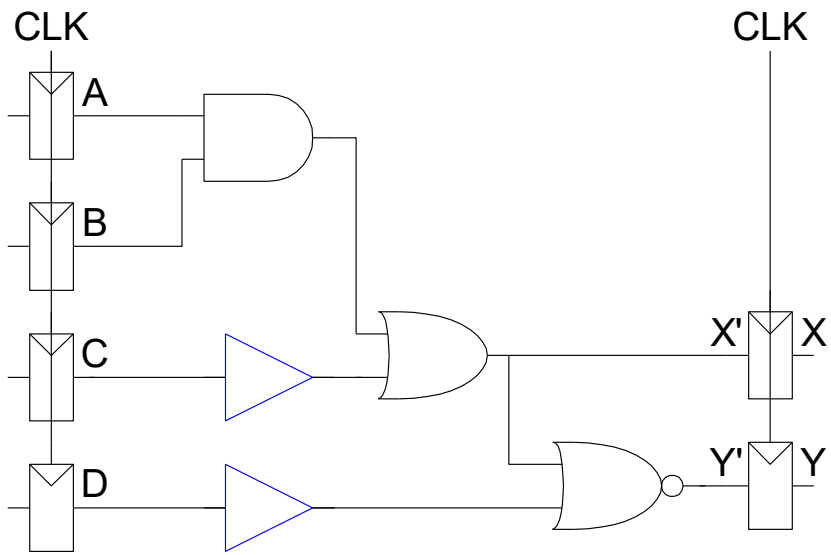

Timing Characteristics

t_{ccq} = 30 ps

t_{pcq} = 50 ps

t_{setup} = 60 ps

t_{hold} = 70 ps

per gate

t_{pd} = 35 ps

t_{cd} = 25 ps

t_{pd} = 3 x 35 ps = 105 ps

t_{cd} = 2 x 25 ps = 50 ps

Setup time constraint:

$T_c \geq (50 + 105 + 60)$ ps = 215 ps

$f_c = 1/T_c$ = 4.65 GHz

Hold time constraint:

$t_{ccq} + t_{cd} > t_{hold}$?

(30 + 50) ps > 70 ps ? **Yes!**

© *Digital Design and Computer Architecture*, 2nd Edition, 2012

ELSEVIER

Clock Skew

- The clock doesn't arrive at all registers at same time
- **Skew:** difference between two clock edges
- Perform **worst case analysis** to guarantee dynamic discipline is not violated for any register – many registers in a system!

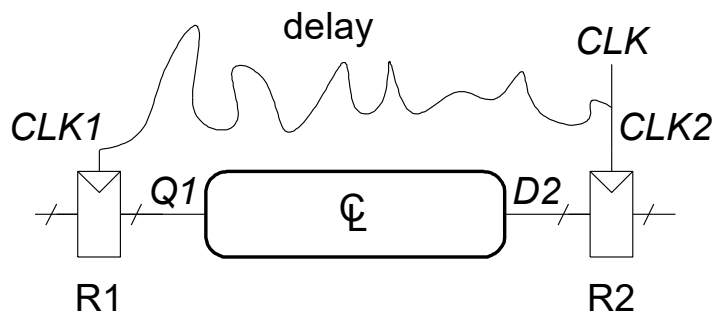

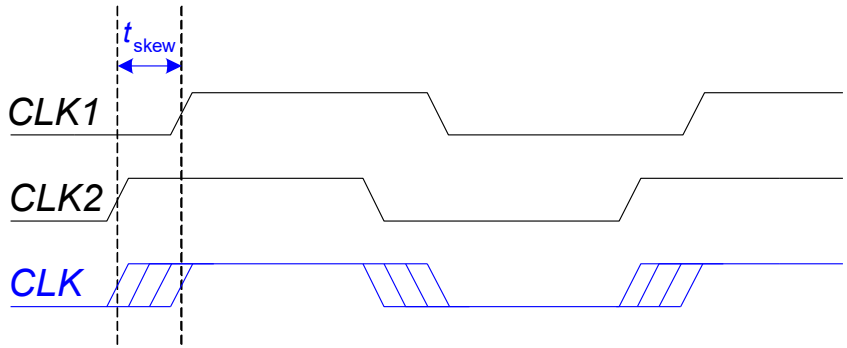

© Digital Design and Computer Architecture, 2nd Edition, 2012

ELSEVIER

Setup Time Constraint with Skew

- In the worst case, CLK2 is earlier than CLK1

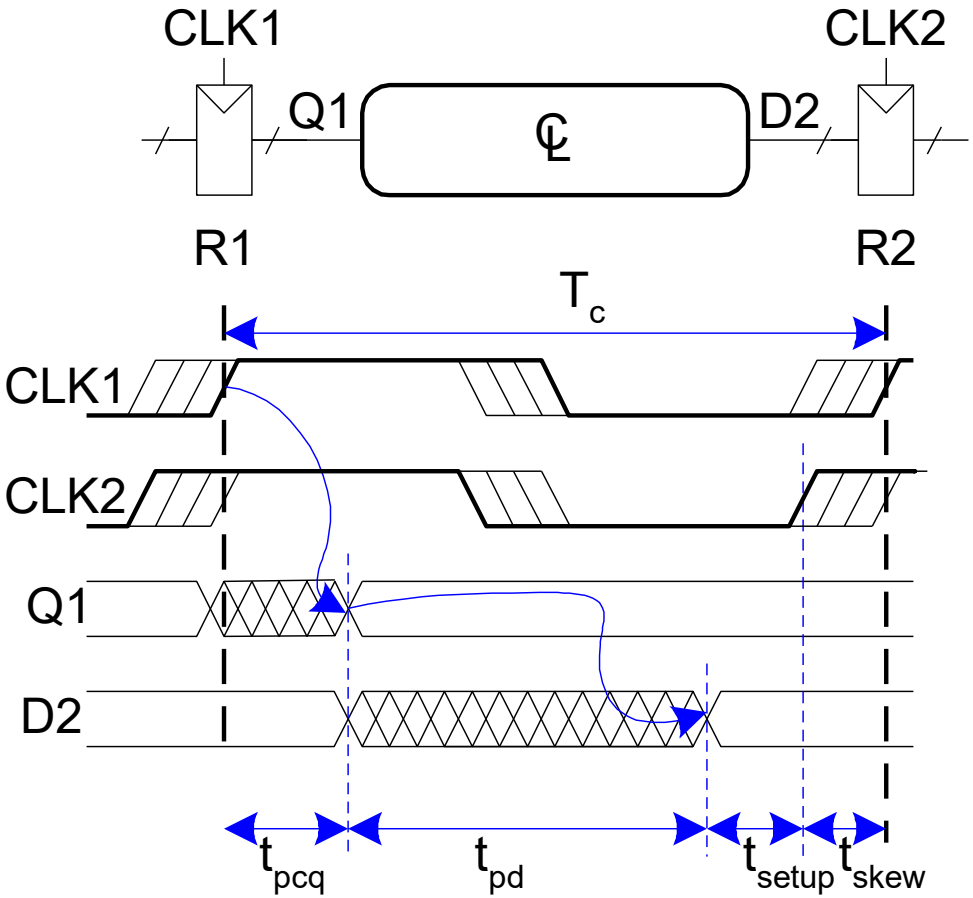

© *Digital Design and Computer Architecture*, 2nd Edition, 2012

Setup Time Constraint with Skew

- In the worst case, CLK2 is earlier than CLK1

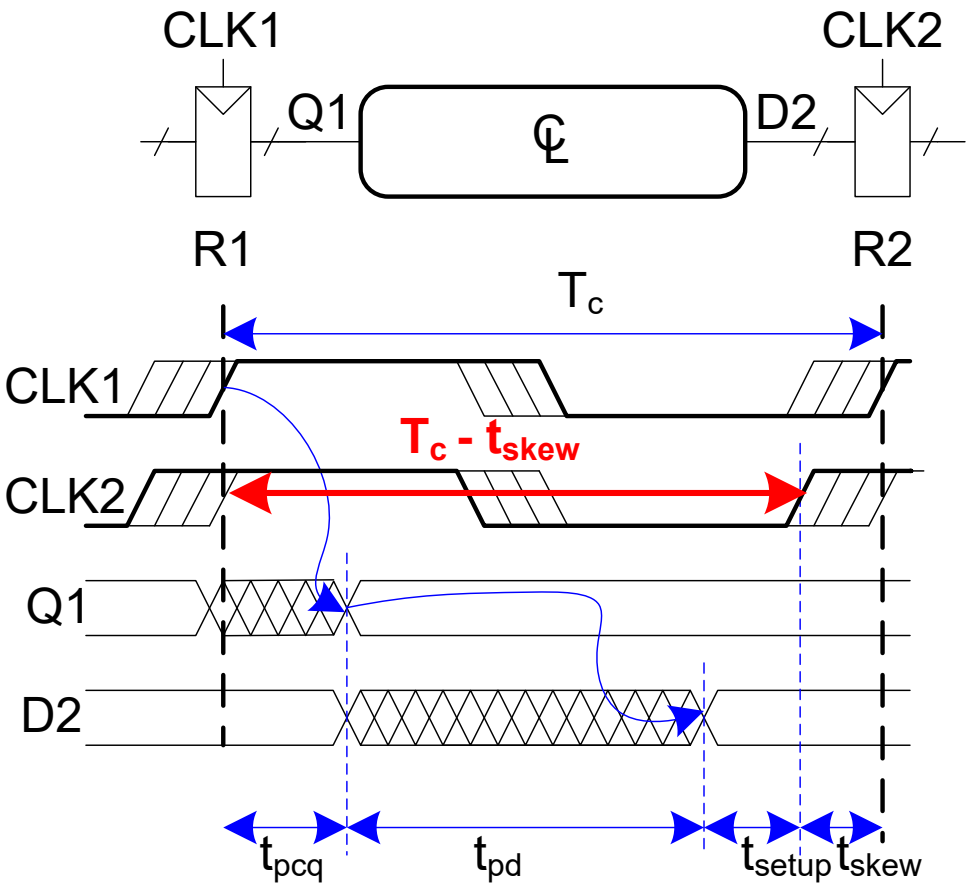

$$T_c - t_{skew} \geq t_{pcq} + t_{pd} + t_{setup}$$

© *Digital Design and Computer Architecture*, 2nd Edition, 2012

Setup Time Constraint with Skew

- In the worst case, CLK2 is earlier than CLK1

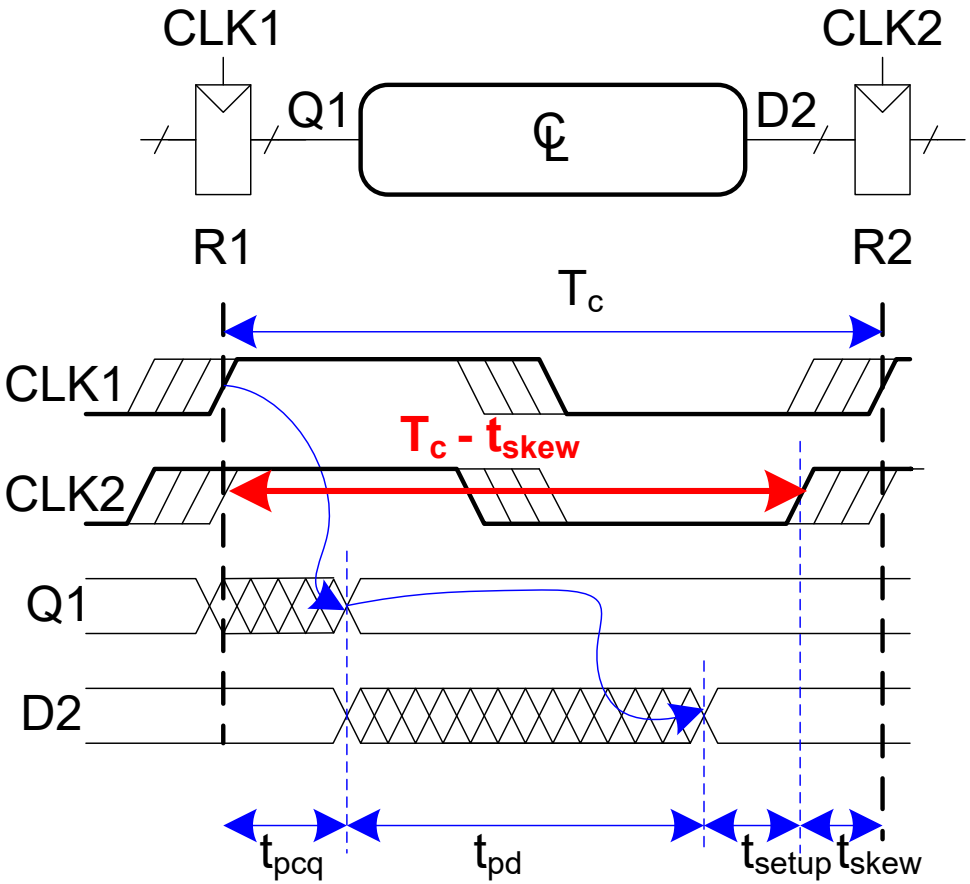

$$T_c - t_{skew} \geq t_{pcq} + t_{pd} + t_{setup}$$

$$T_c \geq$$

© *Digital Design and Computer Architecture*, 2nd Edition, 2012

ELSEVIER

Setup Time Constraint with Skew

- In the worst case, CLK2 is earlier than CLK1

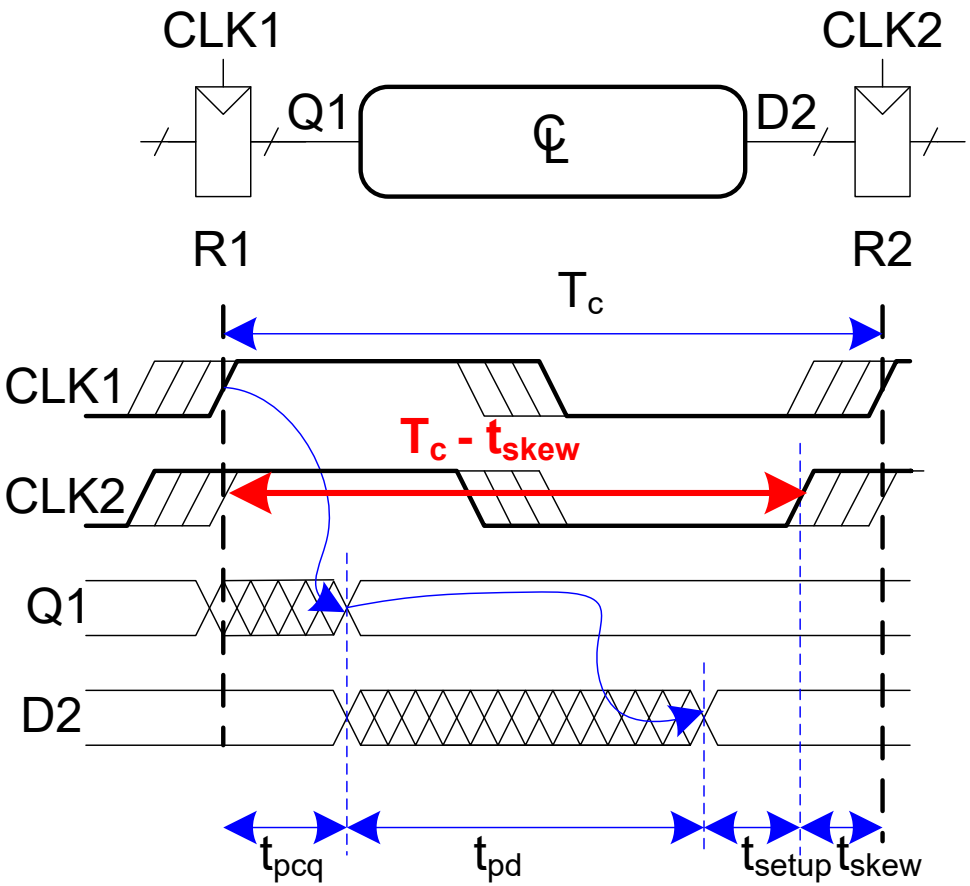

$$T_c - t_{skew} \geq t_{pcq} + t_{pd} + t_{setup}$$

$$T_c \geq t_{pcq} + t_{pd} + t_{setup} + t_{skew}$$

$$t_{pd} \leq$$

© *Digital Design and Computer Architecture*, 2nd Edition, 2012

ELSEVIER

Setup Time Constraint with Skew

- In the worst case, CLK2 is earlier than CLK1

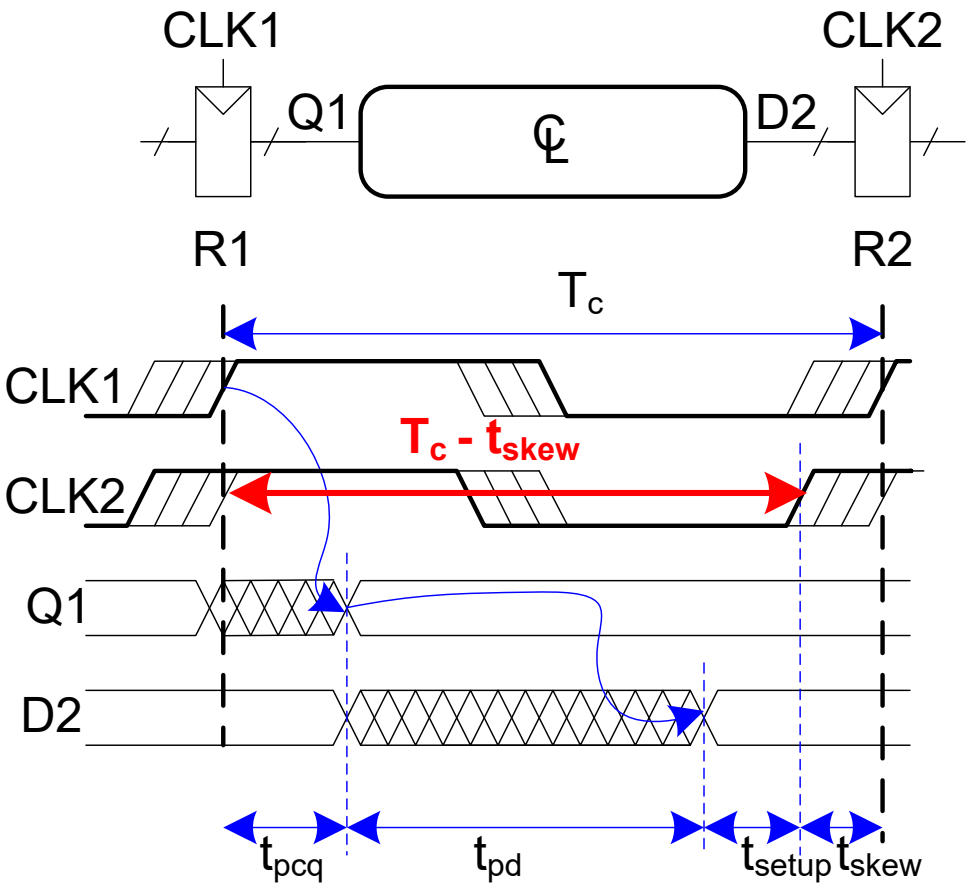

$$T_c - t_{skew} \geq t_{pcq} + t_{pd} + t_{setup}$$

$$T_c \geq t_{pcq} + t_{pd} + t_{setup} + t_{skew}$$

$$t_{pd} \leq T_c - (t_{pcq} + t_{setup} + t_{skew})$$

© *Digital Design and Computer Architecture*, 2nd Edition, 2012

Hold Time Constraint with Skew

- In the worst case, CLK2 is later than CLK1

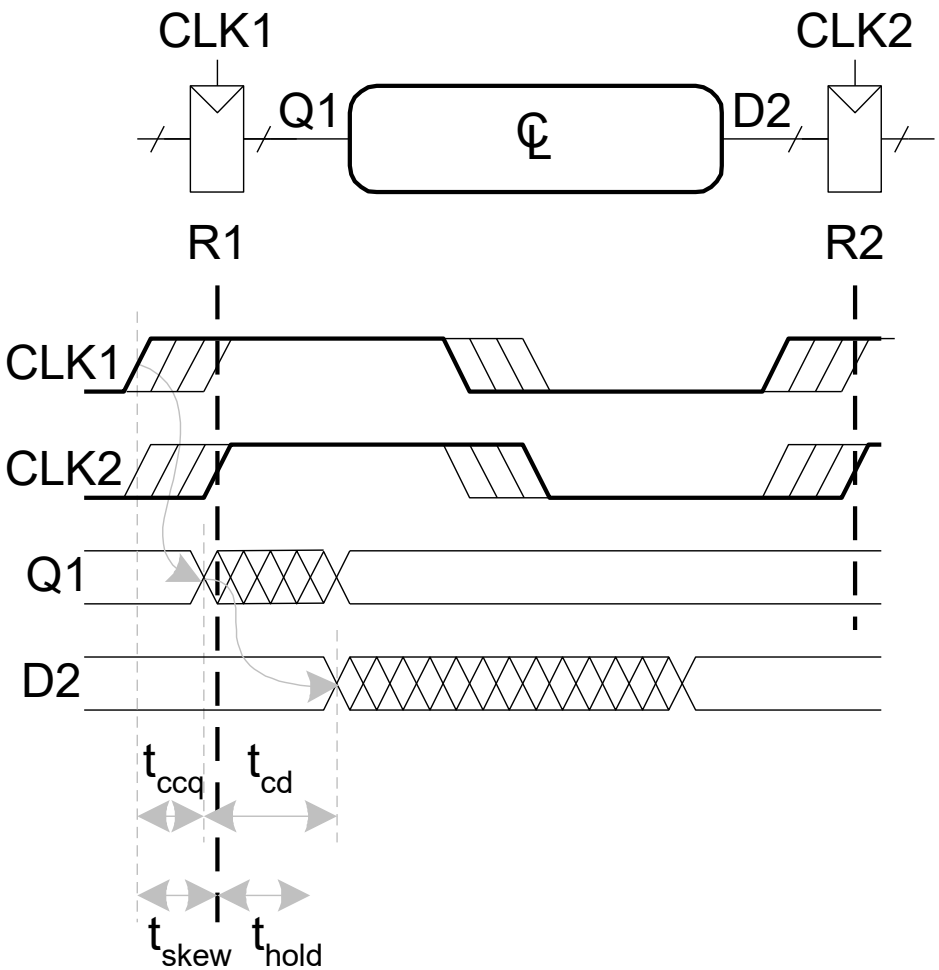

$$t_{ccq} + t_{cd} >$$

© *Digital Design and Computer Architecture*, 2nd Edition, 2012

Hold Time Constraint with Skew

- In the worst case, CLK2 is later than CLK1

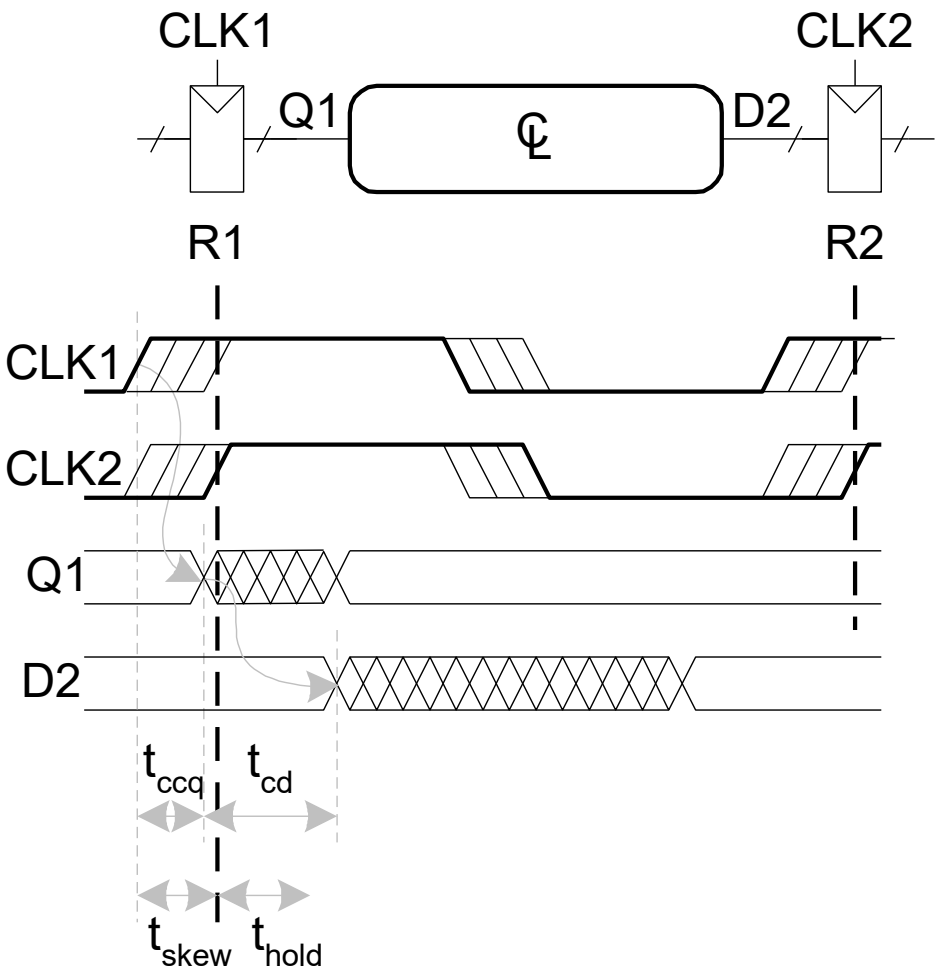

$$t_{ccq} + t_{cd} > t_{hold} + t_{skew}$$

$$t_{cd} >$$

© *Digital Design and Computer Architecture*, 2nd Edition, 2012

ELSEVIER

Hold Time Constraint with Skew

- In the worst case, CLK2 is later than CLK1

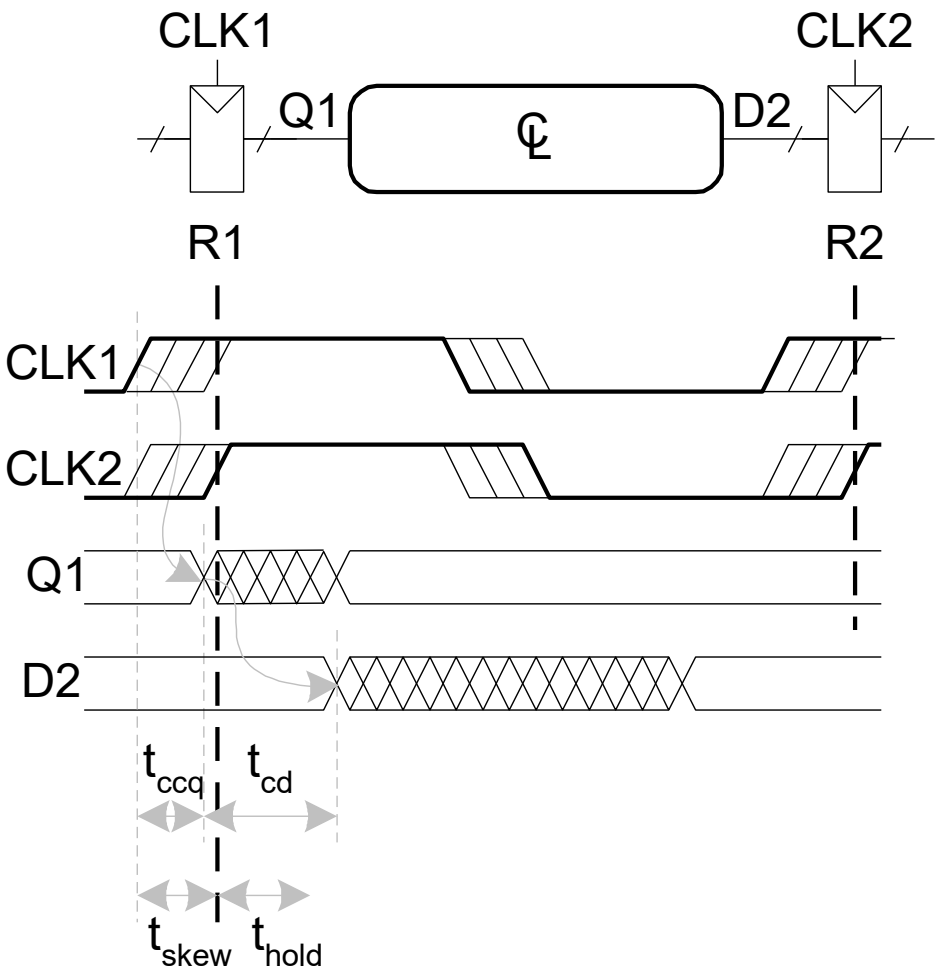

$$t_{ccq} + t_{cd} > t_{hold} + t_{skew}$$

$$t_{cd} > t_{hold} + t_{skew} - t_{ccq}$$

© *Digital Design and Computer Architecture*, 2nd Edition, 2012

Violating the Dynamic Discipline

- Asynchronous (for example, user) inputs might violate the dynamic discipline

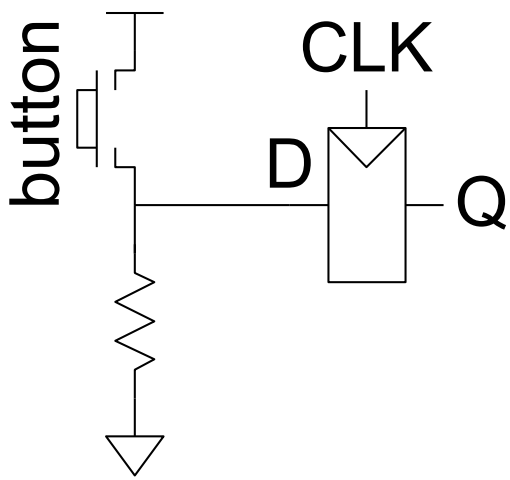

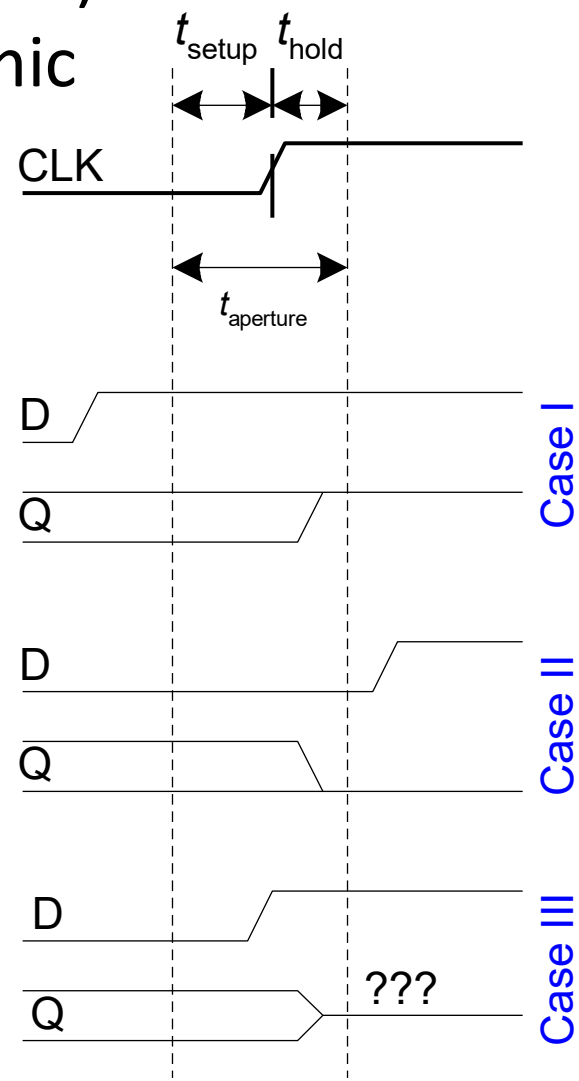

© *Digital Design and Computer Architecture*, 2nd Edition, 2012

ELSEVIER