EKH Series

The Passionate Pursuit of Perfection

en.bole-machinery.com

BOLE Customer Service Center

BOLE MACHINERY

ADD: No.99 Weisan Road, Xiaogang, Ningbo, China

P.C: 315821

TEL: +86-574-86188007

FAX: +86-574-86188008

E-mail: bole-sales@bole-machinery.com

THIS CATALOGUE ARE PROTECT BY LAW OF COPY RIGHT.
ANY USE WITHOUT THE EXPRESS PERMISSION OF THE LAW OF COPY RIGHT,
MUST GET APPROVAL OF BOLE IN ADVANCE.

THIS VERSION WAS PRINTED IN FEB. 2023,
ANY DIFFERENCE SPECIFICATION FROM OLD VERSION SHOULD BE SUBLECT TO THIS VERSION.

Injection Moulding Machine

EKH

Hydraulic Servo Energy Saving Injection Moulding Machine

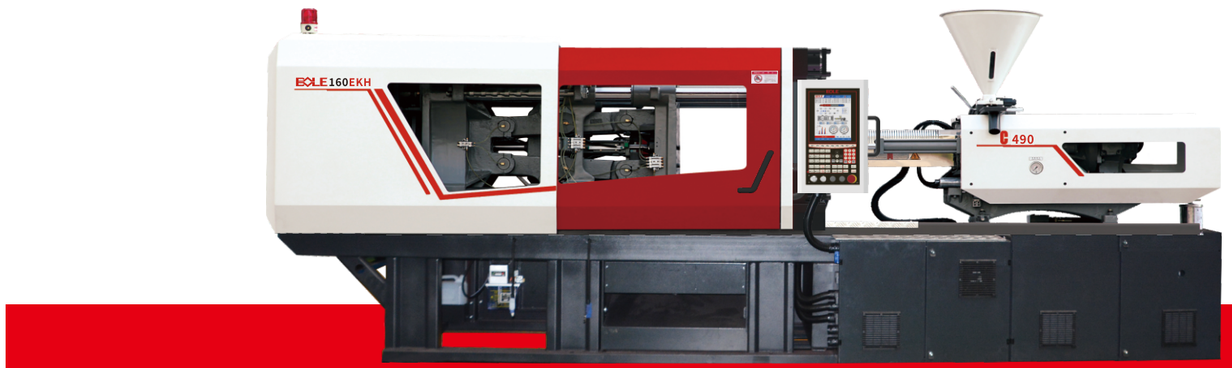

Invention Patent, Central Clamping Toggle

(Patent No.: ZL2011 10250342.5)

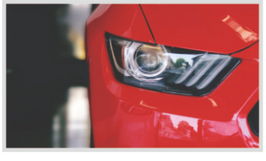
Automobile industry

Commodity industry

3C Electrics

Home appliance

Logistics

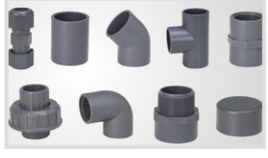
Plastic pipe fittings

Septic tank

Invention Patent, Central Clamping Toggle

Toggle System Comparison

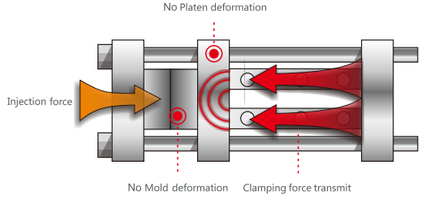

BOLE central clamping toggle

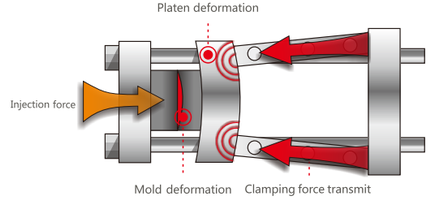

Traditional toggle system

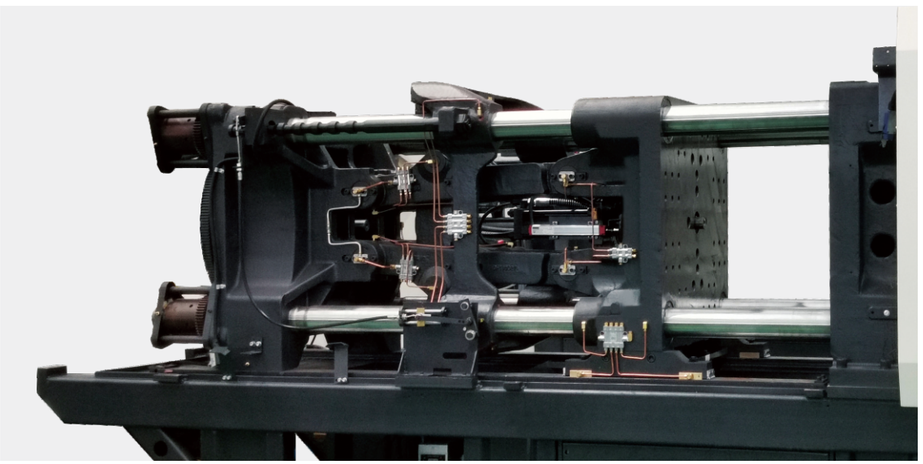

01 High clamping force efficiency

After sample survey, clamping force efficiency of BOLE central clamping toggle design can reach 100%, and traditional edge clamping toggle design, clamping force efficiency only can reach 80-85%.

02 Material Saving

BOLE central clamping toggle design can save 2-5% material for 80% of customers mould (comparing to traditional edge clamping toggle design).

03 High accuracy Less possibility of flash

Mold open&close positioning accuracy : ±1mm
Injection weight accuracy : ≤0.5%
Less possibility of flash, save flash trim work.

04 Offer good protection to mould and platens

New designed clamping structure , bear averaged force ,Less platen distortion , effectively extend mould life.

05 Big open stroke

Larger open&ejection stroke comparing with other brand, much easier to install larger mould (especially for deep cavity mould).

Center-clamping structure,invention patent in China

- Fully optimizd hydraulic system, the system pressure rises to 17.5MPA, improved injection pressure.

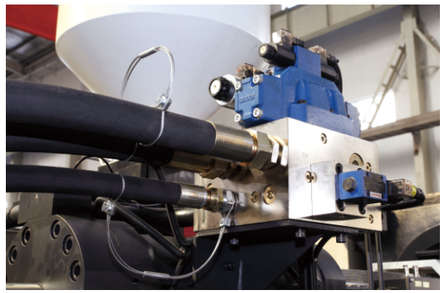

- Third generation of hydraulic servo system, energy saving, the system response time is shorter. According to GB/T30200-2013 standard test, all types of BOLE machines meet the requirement of CLASS 1-energy consumption≤0.4KW.

- The rigidity of mechanical part is improved, reasonable distribution of bearing point.

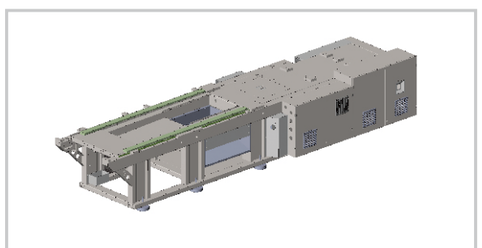

- The ridigity of clamping part is improved, further prolong the life time of machine.

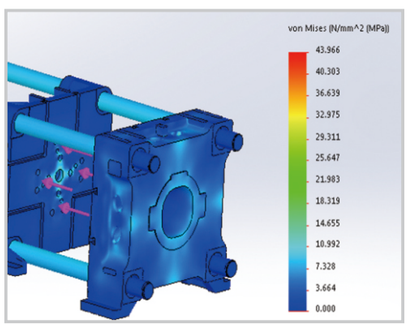

- Optimized electrical cabinet design, conform to GB, CE, UL, KCS or other safety standard.
- Electrical parts from famous international manufacturers, ensure machine with reliable performance.
- EST controller is Standard.

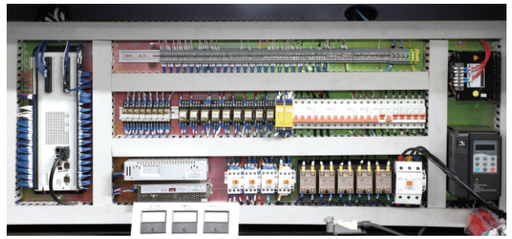

- Plasticzing system originated from Germany design, and its efficiency improve 20% above the performance of other Chinese manufacturers. (Common plastic materials ABS, PS, PP,etc.)
- Meet Custom-made requirement for complex technical process and special plasticzing solutions.

Technical Data

DESCRIPTION	UNIT	BL120EKH/C360			BL160EKH/C490			BL200EKH/C700			BL250EKH/C980		
International specification		360			490			700			980		
Screw specifications		A	B	C	A	B	C	A	B	C	A	B	C
Screw diameter	mm	32	36	40	36	40	45	40	45	50	45	50	55
Screw L/D ratio		23	22	20	23	21	19	23	21	19	23	22	20
Theoretical injection capacity	cm^3	153	193	239	214	264	334	301	382	471	429	530	641
Shot weight (PS)	g	141	178	220	197	243	307	277	351	433	395	487	590
	oz	5.0	6.3	7.8	6.9	8.6	10.9	9.8	12.4	15.3	14.0	17.2	20.8
Max. injection rate into Air	cm^3/s	96	122	150	127	156	198	155	197	243	200	247	299
Max. injection rate into Air	g/s	87	111	137	115	142	180	141	179	221	182	225	272
Injection pressure	Mpa	239	189	153	230	186	147	235	185	150	230	186	154
Theoretical plasticizing speed	g/s (PS)	11	14	19	16	21	29	18	25	33	27	35	43
Injection stroke	mm	190			210			240			270		
Max. injection speed	mm/s	119			125			124			126		
Max. screw speed	r/min	221			240			210			221		
Sys. Pressure	Mpa	17.5			17.5			17.5			17.5		
Pump Motor (min~max)	kW	8.9～13.4			13.4～15.3			16.4～17.1			20.5～22.4		
Number of Motors	pc	1			1			1			1		
Pre-plasticizing motor power	kW	optional			optional			optional			optional		
Heater power	kW	8.05			9.45			12.85			14.67		
Number of temp. control zones		3+1			3+1			3+1			4+1		
Clamping force	kN	1200			1600			2000			2500		
Opening stroke	mm	360			420			480			530		
Space between tie bar	mm x mm	405×355			455×405			505×455			555×505		
Min. mould height	mm	160（125）			180（145）			200（165）			220（175）		
Max. mould height	mm	430（430）			500（500）			530（530）			570(570)		
Max. Daylight	mm	790（790）			920（920）			1010（1010）			1100(1100)		
Ejector stroke	mm	120			140			150			150		
Ejector force forward	kN	34			49			49			67		
Ejector force back	kN	22			37			37			39		
Number of ejector bar	PC	5			5			5			9		
Dry cycle time	s	3.1			2.4			2.5			3.3		
Energy consumption	kW.h/kg	≤0.4（1级）			≤0.4（1级）			≤0.4（1级）			≤0.4（1级）		
Hopper capacity	kg	25			25			25			50		
Oil tank capacity	L	125			165			205			255		
Machine dimensions（L×W×H）	m x m x m	4.4x1.3x2.1			4.9x1.4x2.1			5.2x1.4x2.2			5.7x1.5x2.4		
Machine weight	ton	3.2			3.8			4.9			6.3		

1: Accoring to GB/T30200-2013 standard, PP material　2: Its a theoretical calculation value　3: Optional items, extra charge

Due to the continuous product improvement, we reserve the right to adjust the individual parameters without notice.

Technical Data

DESCRIPTION	UNIT	BL300EKH/C1600			BL400EKH/C2400			BL450EKH/C3100			BL530EKH/C4000			BL600EKH/C4700		
International specification		1600			2400			3100			4000			4700		
Screw specifications		A	B	C	A	B	C	A	B	C	A	B	C	A	B	C
Screw diameter	mm	55	60	65	62	68	75	70	75	85	75	80	90	80	90	100
Screw L/D ratio		23	22	20	23	23	21	23	21	19	22	21	19	24	21	19
Theoretical injection capacity	cm^3	748	890	1045	1086	1307	1590	1462	1678	2155	1943	2211	2798	2286	2893	3572
Shot weight (PS)	g	688	819	961	999	1202	1462	1345	1544	1983	1787	2034	2574	2103	2662	3286
	oz	24.3	28.9	34.0	35.3	42.5	51.7	47.5	54.5	70.1	63.2	71.9	91.0	74.3	94.1	116.1
Max. injection rate into Air	cm^3/s	267	317	373	334	401	488	430	493	634	558	635	804	707	895	1105
Max. injection rate into Air	g/s	243	289	339	304	365	444	391	449	576	508	578	731	644	815	1006
Injection pressure	Mpa	219	184	157	219	182	149	212	185	144	209	184	145	206	163	132
Theoretical plasticizing speed	g/s (PS)	41	55	69	47	59	85	66	79	101	81	96	132	100	138	177
Injection stroke	mm	315			360			380			440			455		
Max. injection speed	mm/s	112			111			112			126			141		
Max. screw speed	r/min	210			175			164			168			175		
Sys. Pressure	Mpa	17.5			17.5			17.5			17.5			17.5		
Pump Motor (min~max)	kW	26.7~29.9			37~40.9			47.2~50.7			60.5~65			75.1~81.8		
Number of Motors	pc	1			1			1			2			2		
Pre-plasticizing motor power	kW	optional			optional			optional			optional			optional		
Heater power	kW	19.7			26.85			29.2			32.15			36.3		
Number of temp. control zones		4+1			4+1			4+1			5+1			5+1		
Clamping force	kN	3000			4000			4500			5300			6000		
Opening stroke	mm	590			660			750			850			900		
Space between tie bar	mm x mm	655×605			710×660			760×710			860×800			910×855		
Min. mould height	mm	250(205)			270(225)			330			330			380		
Max. mould height	mm	660(660)			710(710)			780			850			910		
Max. Daylight	mm	1250(1250)			1370(1370)			1530			1700			1810		
Ejector stroke	mm	190			190			210			210			220		
Ejector force forward	kN	67			123			123			123			123		
Ejector force back	kN	39			82			82			82			82		
Number of ejector bar	PC	13			13			13			13			21		
Dry cycle time	s	2.8			3.6			3.7			4.3			4.4		
Energy consumption	kW.h/kg	≤0.4（1级）			≤0.4（1级）			≤0.4（1级）			≤0.4（1级）			≤0.4（1级）		
Hopper capacity	kg	50			50			50			100			100		
Oil tank capacity	L	345			375			430			600			810		
Machine dimensions（L×W×H）	m x m x m	6.3x1.7x2.5			7x1.8x2.5			7.7x1.9x2.6			8.3x2.1x2.9			9.1x2.2x2.9		
Machine weight	ton	8.3			11			12.5			16.9			22		

1: Accoring to GB/T30200-2013 standard, PP material　2: Its a theoretical calculation value　3: Optional items, extra charge

Due to the continuous product improvement, we reserve the right to adjust the individual parameters without notice.

Technical Data

DESCRIPTION	UNIT	BL700EKH/C5800			BL800EKH/C8600			BL900EKH/C8600			BL1000EKH/C10500			BL1200EKH/C10500		
International specification		5800			8600			8600			10500			10500		
Screw specifications		A	B	C	A	B	C	A	B	C	A	B	C	A	B	C
Screw diameter	mm	85	95	105	95	105	115	100	110	120	110	120	130	110	120	130
Screw L/D ratio		23	21	19	23	21	19	23	21	19	23	21	19	23	21	19
Theoretical injection capacity	cm^3	2836	3542	4327	3861	4717	5658	4278	5177	6161	5652	6726	7894	5652	6726	7894
Shot weight (PS)	g	2609	3259	3981	3552	4339	5205	3936	4763	5668	5199	6188	7262	5199	6188	7262
	oz	92.2	115.2	140.7	125.5	153.3	183.9	139.1	168.3	200.3	183.7	218.7	256.6	183.7	218.7	256.6
Max. injection rate into Air	cm^3/s	708	884	1080	816	997	1196	904	1094	1302	985	1172	1375	985	1172	1375
Max. injection rate into Air	g/s	644	805	983	743	907	1088	823	996	1185	896	1066	1252	896	1066	1252
Injection pressure	Mpa	206	165	135	223	183	152	202	167	140	185	156	133	185	156	133
Theoretical plasticizing speed	g/s (PS)	92	132	177	149	200	256	172	230	292	166	211	248	166	211	248
Injection stroke	mm	500			545			545			595			595		
Max. injection speed	mm/s	125			115			115			104			104		
Max. screw speed	r/min	150			169			169			122			122		
Sys. Pressure	Mpa	17.5			17.5			17.5			17.5			17.5		
Pump Motor (min~max)	kW	75.1～81.8			92.6～101.4			92.6～101.4			92.6～101.4			92.6～101.4		
Number of Motors	pc	2			2			2			2			2		
Pre-plasticizing motor power	kW	optional			optional			optional			optional			optional		
Heater power	kW	44.85			45.5			49.7			60.8			60.8		
Number of temp. control zones		5+1			5+1			5+1			6+1			6+1		
Clamping force	kN	7000			8000			9000			10000			12000		
Opening stroke	mm	970			1050			1120			1150			1320		
Space between tie bar	mm x mm	955×855			1055×955			1110×1010			1160×1060			1260×1120		
Min. mould height	mm	400			450			450			480			500		
Max. mould height	mm	960			1000			1100			1160			1200		
Max. Daylight	mm	1930			2050			2220			2310			2520		
Ejector stroke	mm	260			270			300			300			350		
Ejector force forward	kN	166			166			232			248			248		
Ejector force back	kN	117			117			132			165			165		
Number of ejector bar	PC	21			21			21			21			21		
Dry cycle time	s	3.8			5.6			5.6			7.0			8.0		
Energy consumption	kW.h/kg	≤0.4（1级）			≤0.4（1级）			≤0.4（1级）			≤0.4（1级）			≤0.4（1级）		
Hopper capacity	kg	100			100			100			100			200		
Oil tank capacity	L	890			960			960			1320			1320		
Machine dimensions（L×W×H）	m x m x m	9.6x2.3x3			10.4x2.5x3.1			10.8x2.6x3.1			10.9x2.9x4.2			11.4x3x4.2		
Machine weight	ton	25			30			38			45			52		

1: Accoring to GB/T30200-2013 standard, PP material 2: Its a theoretical calculation value 3: Optional items, extra charge

Due to the continuous product improvement, we reserve the right to adjust the individual parameters without notice.

Technical Data

DESCRIPTION	UNIT	BL1400EKH/C13000			BL1600EKH/C16000			BL1850EKH/C22000		BL1850EKH/C35000		BL2200EKH/C35000		BL2200EKH/C54000	
International specification		13000			16000			22000		35000		35000		54000	
Screw specifications		A	B	C	A	B	C	A	B	A	B	A	B	A	B
Screw diameter	mm	120	130	140	130	140	150	140	160	160	180	160	180	190	210
Screw L/D ratio		23	21	20	23	21	20	24	21	23.6	21	23.6	21	23	21
Theoretical injection capacity	cm^3	7235	8491	9847	9021	10462	12011	14155	18488	22508	28486	22508	28486	36840	45004
Shot weight (PS)	g	6656	7811	9059	8300	9625	11050	13023	17009	20707	26207	20707	26207	33893	41404
	oz	235.2	276.0	320.1	293.3	340.1	390.4	460.2	601.0	731.7	926.0	731.7	926.0	1197.6	1463.0
Max. injection rate into Air	cm^3/s	1210	1420	1647	1420	1647	1891	1624	2121	2016	2551	2016	2551	2396	2894
Max. injection rate into Air	g/s	1101	1292	1499	1292	1499	1721	1478	1930	1835	2322	1835	2322	2156	2633
Injection pressure	Mpa	181	154	133	180	155	135	157	120	158	125	158	125	146	120
Theoretical plasticizing speed	g/s (PS)	201	237	284	220	264	316	195	304	304	368	304	368	345	441
Injection stroke	mm	640			680			920		1120		1120		1300	
Max. injection speed	mm/s	107			107			106		100		100		84	
Max. screw speed	r/min	117			108			80		80		80		63	
Sys. Pressure	Mpa	17.5			17.5			17.5		17.5		17.5		17.5	
Pump Motor (min~max)	kW	117.5～121			140.1～142.3			140.1～142.3		164.7～171.7		164.7～171.7		181.5～182.5	
Number of Motors	pc	3			3			3		4		4		4	
Pre-plasticizing motor power	kW	optional			optional			optional		optional		optional		209	
Heater power	kW	80			87.8			99.7		125.3		125.3		200.5	
Number of temp. control zones		6+1			6+1			6+2		7+1		7+1		8+1	
Clamping force	kN	14000			16000			18500				22000			
Opening stroke	mm	1450			1550			1680				1850			
Space between tie bar	mm x mm	1420×1220			1520×1320			1620×1420				1720×1520			
Min. mould height	mm	580			680			750				750			
Max. mould height	mm	1300			1450			1550				1700			
Max. Daylight	mm	2750			3000			3230				3550			
Ejector stroke	mm	350			400			400				450			
Ejector force forward	kN	248			363			363				465			
Ejector force back	kN	165			280			280				365			
Number of ejector bar	PC	29			29			29				33			
Dry cycle time	s	8.5			9.0			10.0		9.5		11.0		10.0	
Energy consumption	kW.h/kg	≤0.4（1级）			≤0.4（1级）			≤0.4（1级）		≤0.4（1级）		≤0.4（1级）		≤0.4（1级）	
Hopper capacity	kg	200			200			200				400			
Oil tank capacity	L	1600			1650			1650		1950		1950			
Machine dimensions (L×W×H)	m x m x m	12.3x3.3x4.1			13.4x3.4x4.3			14.9x3.9x4.5		15.8x3.9x4.6		16.9x4.1x4.6		18.1x4.1x4.6	
Machine weight	ton	67			90			105		110		130		140	

1: Accoring to GB/T30200-2013 standard, PP material　2: Its a theoretical calculation value　3: Optional items, extra charge

Due to the continuous product improvement, we reserve the right to adjust the individual parameters without notice.

Technical Data

DESCRIPTION	UNIT	BL2500EKH/C54000		BL2800EKH/C54000		BL2800EKH/C72000		BL3300EKH/C72000		BL3300EKH/C94000		BL4000EKH/C94000	
International specification		54000		54000		72000		72000		94000		94000	
Screw specifications		A	B	A	B	A	B	A	B	A	B	A	B
Screw diameter	mm	190	210	190	210	215	240	215	240	240	260	240	260
Screw L/D ratio		23	21	23	21	23	20.5	23	20.5	23	21	23	21
Theoretical injection capacity	cm^3	36840	45004	36840	45004	49350	61494	49350	61494	64207	75354	64207	75354
Shot weight (PS)	g	33893	41404	33893	41404	45402	56574	45402	56574	59070	69325	59070	69325
	oz	1197.6	1463.0	1197.6	1463.0	1604.3	1999.1	1604.3	1999.1	2087.3	2449.7	2087.3	2449.7
Max. injection rate into Air	cm^3/s	2369	2894	2369	2894	2486	3098	2486	3098	3113	3654	3113	3654
Max. injection rate into Air	g/s	2156	2633	2156	2633	2262	2819	2262	2819	2833	3325	2833	3325
Injection pressure	Mpa	146	120	146	120	147	118	147	118	146	125	146	125
Theoretical plasticizing speed	g/s (PS)	345	441	345	441	481	626	481	626	626	764	626	764
Injection stroke	mm	1300		1300		1360		1360		1420		1420	
Max. injection speed	mm/s	84		84		69		69		69		69	
Max. screw speed	r/min	63		63		63		63		63		63	
Sys. Pressure	Mpa	17.5		17.5		17.5		17.5		17.5		17.5	
Pump Motor (min~max)	kW	181.5～182.5		181.5～182.5		185.2～202.8		185.2～202.8		235～242		235～242	
Number of Motors	pc	4		4		4		4		5		5	
Pre-plasticizing motor power	kW	209		209		314		314		314		314	
Heater power	kW	200.5		200.5		222.8		222.8		271.6		271.6	
Number of temp. control zones		8+1		8+1		8+1		8+1		8+1		8+1	
Clamping force	kN	25000		28000				33000				40000	
Opening stroke	mm	2000		2100				2200				2350	
Space between tie bar	mm x mm	1820×1620		1920×1720				2110×1910				2420×2220	
Min. mould height	mm	800		850				950				1100	
Max. mould height	mm	1800		1900				2000				2100	
Max. Daylight	mm	3800		4000				4200				4450	
Ejector stroke	mm	500		500				550				600	
Ejector force forward	kN	465		465				618				618	
Ejector force back	kN	365		365				483				483	
Number of ejector bar	PC	33		33				25				25	
Dry cycle time	s	11.0		12.5		12.0		13.0		12.5		13.5	
Energy consumption	kW.h/kg	≤0.4（1级）		≤0.4（1级）		≤0.4（1级）		≤0.4（1级）		≤0.4（1级）		≤0.4（1级）	
Hopper capacity	kg	400		400				400				400	
Oil tank capacity	L	1950		1950		2450		2450		3000		3000	
Machine dimensions (L×W×H)	m x m x m	18.6x4.3x4.8		19.1x4.5x4.9		20.1x4.5x5		20.4x5x5.1		21.2x5x5.1		22.5x5.3x5.1	
Machine weight	ton	170		190		205		255		265		320	

1: Accoring to GB/T30200-2013 standard, PP material 2: Its a theoretical calculation value 3: Optional items, extra charge

Due to the continuous product improvement, we reserve the right to adjust the individual parameters without notice.

Machine Dimensions & Platen Dimensions

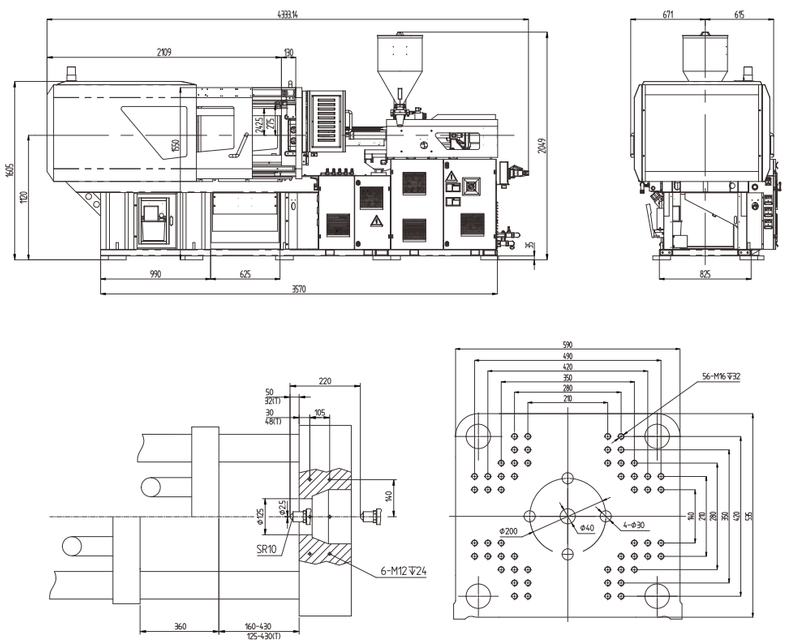

BL120EKH

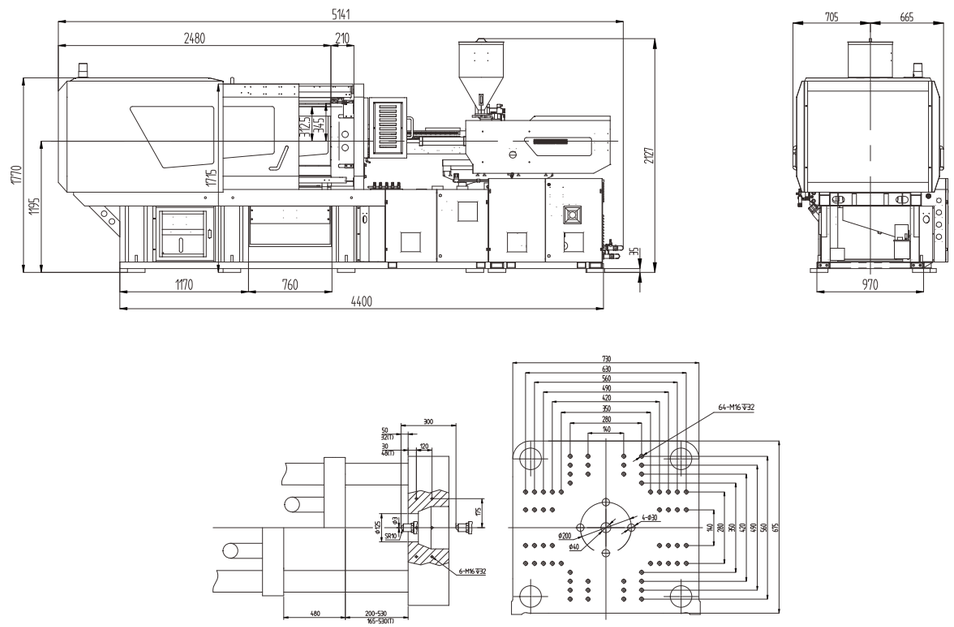

BL200EKH

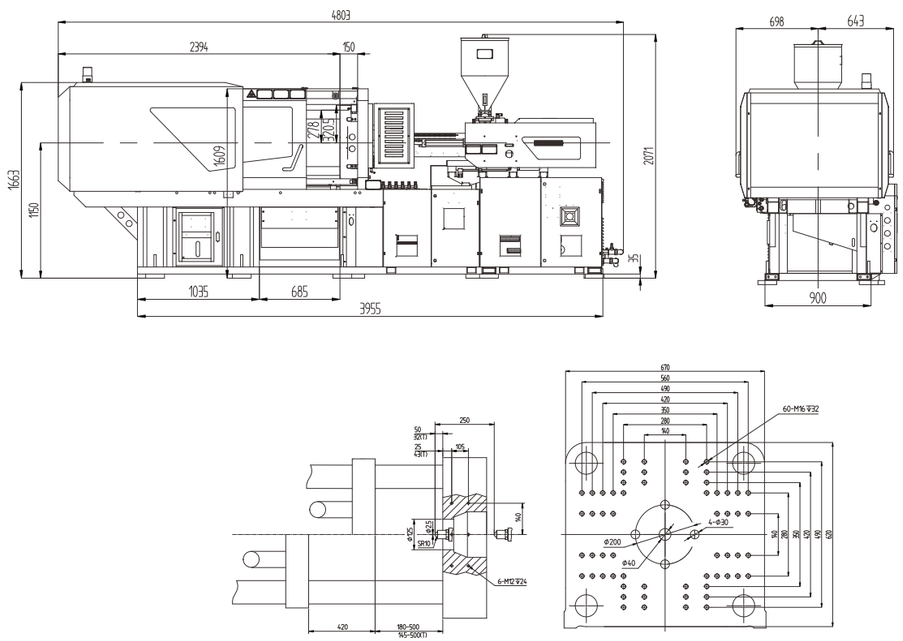

BL160EKH

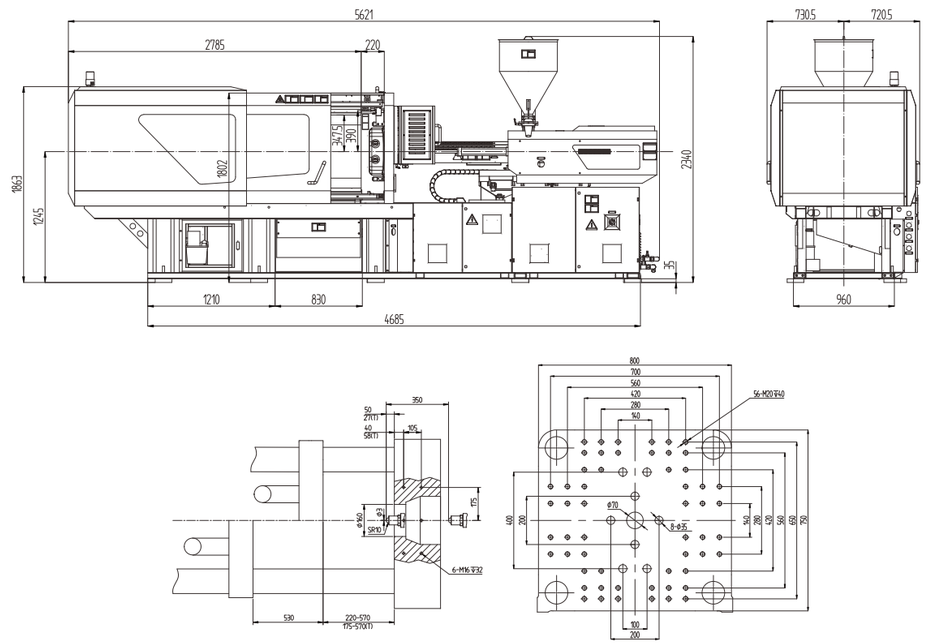

BL250EKH

Machine Dimensions & Platen Dimensions

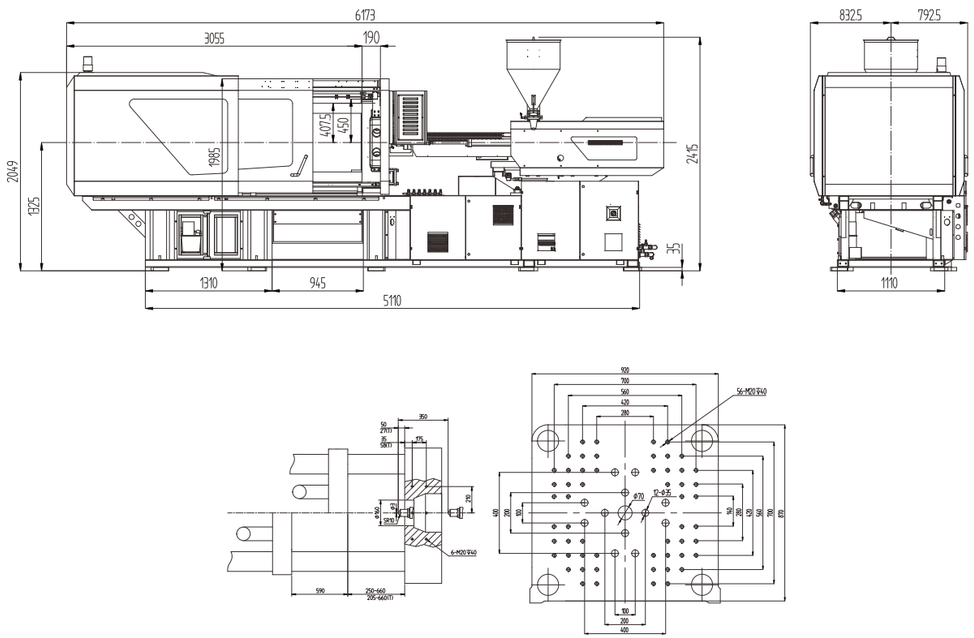

BL300EKH

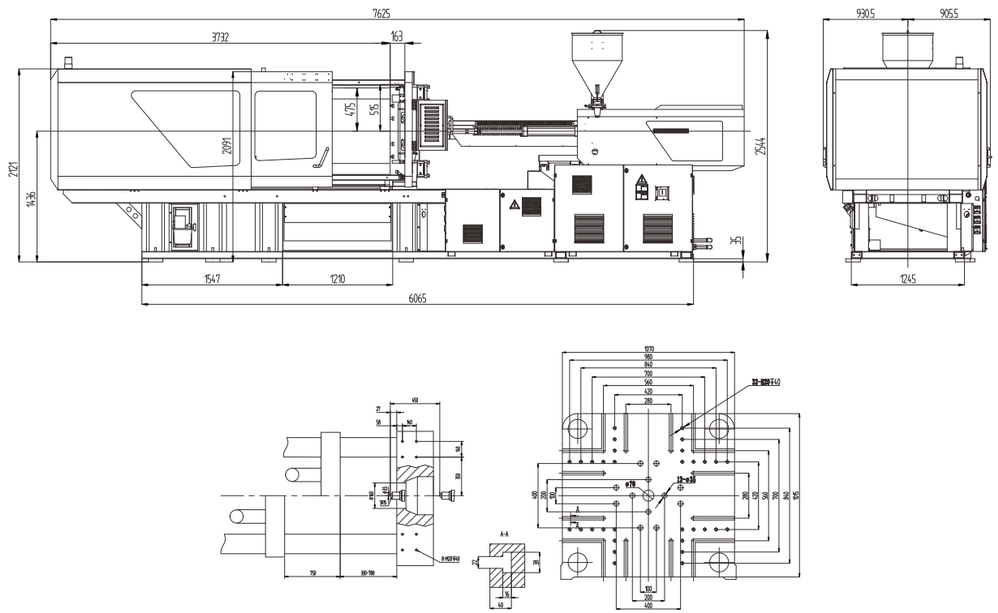

BL450EKH

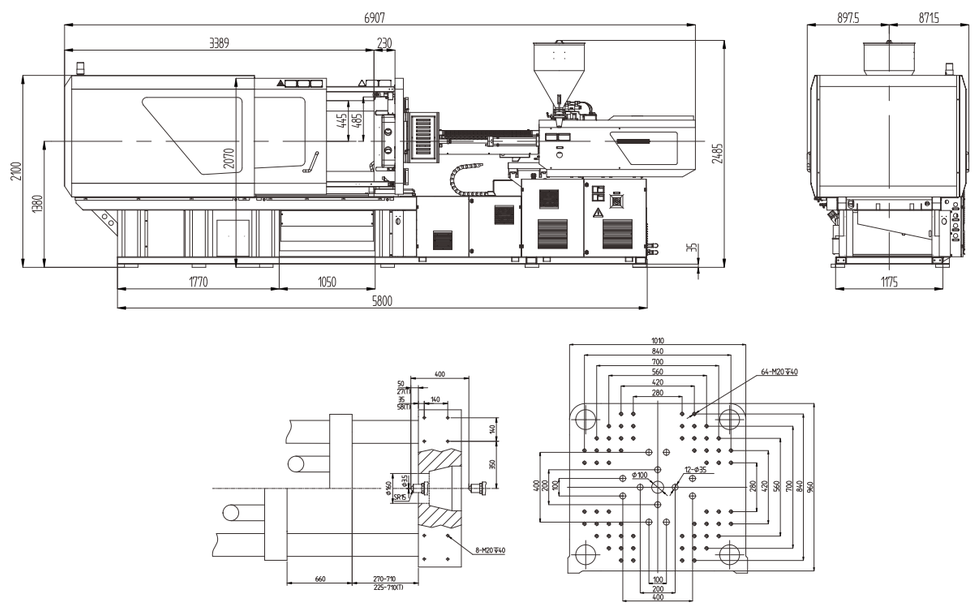

BL400EKH

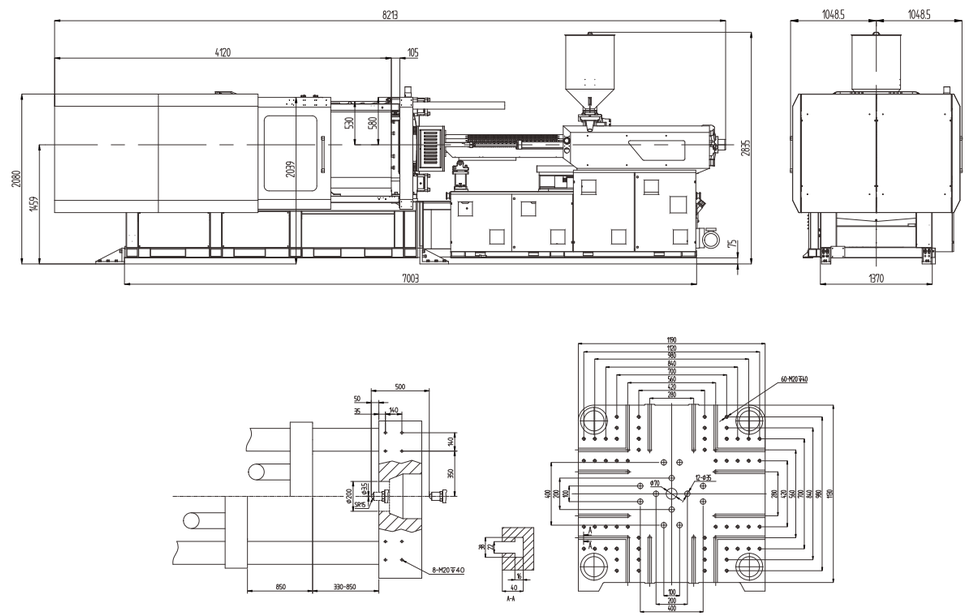

BL530EKH

Machine Dimensions & Platen Dimensions

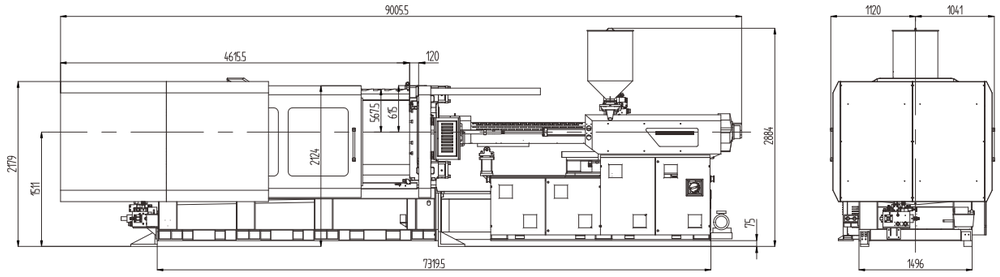

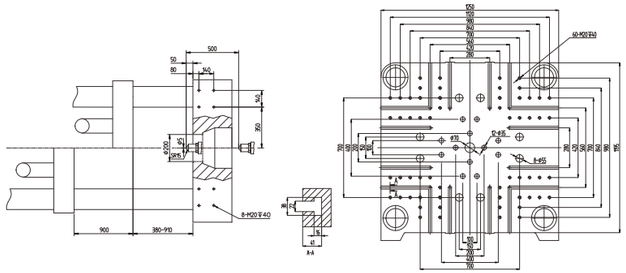

BL600EKH

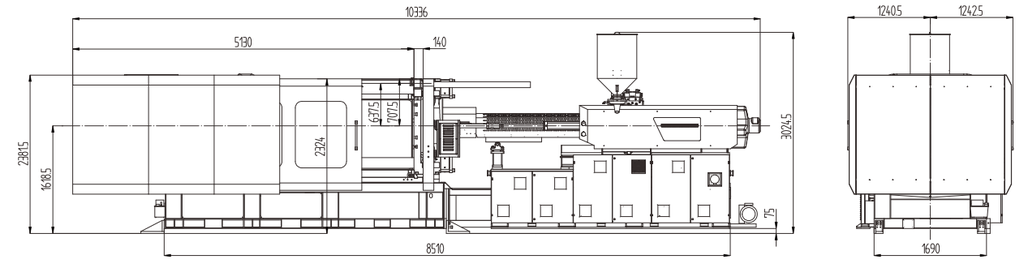

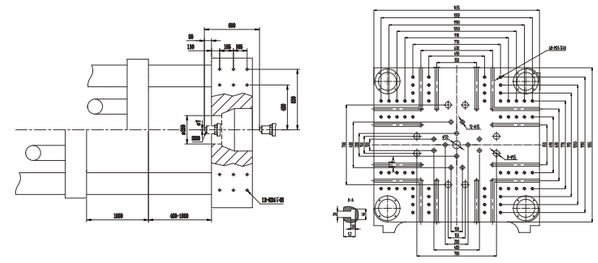

BL800EKH

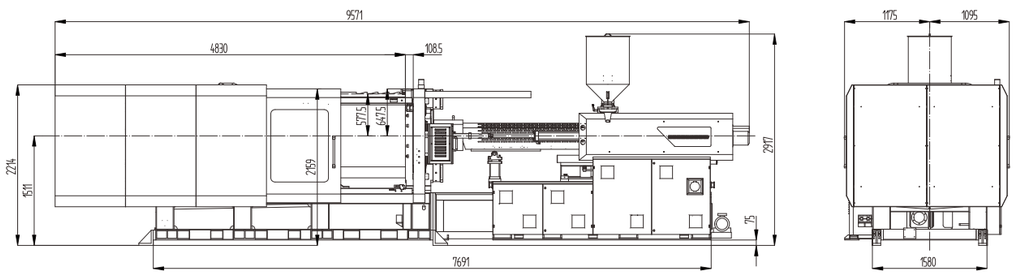

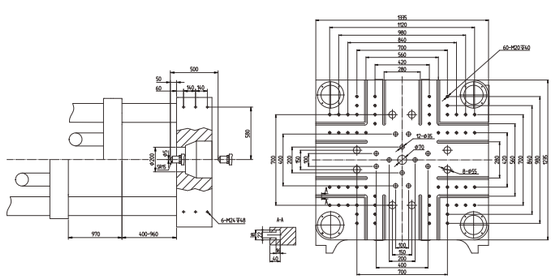

BL700EKH

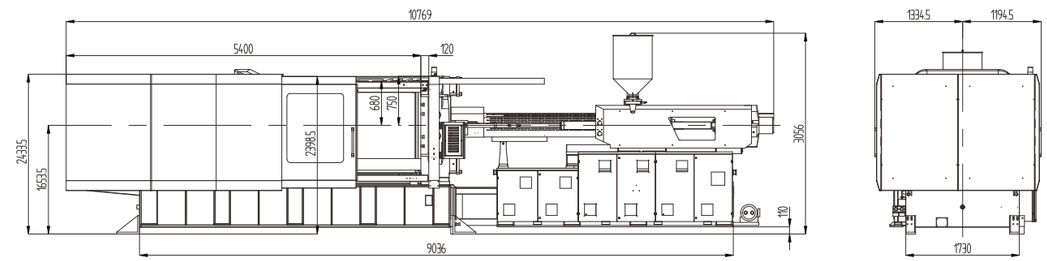

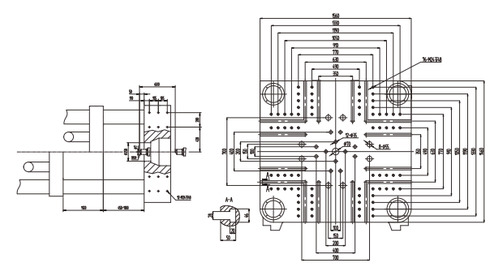

BL900EKH

Machine Dimensions & Platen Dimensions

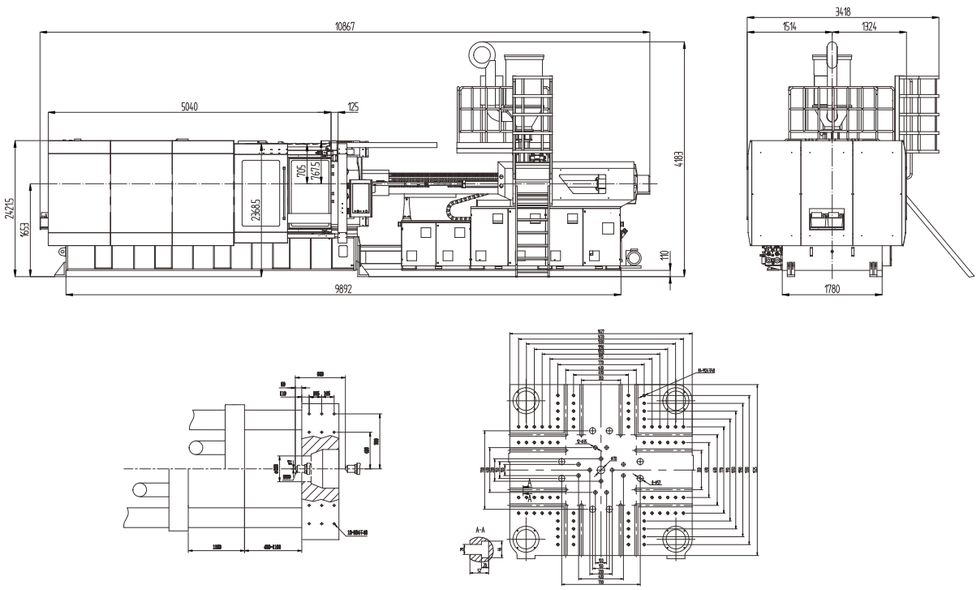

BL1000EKH

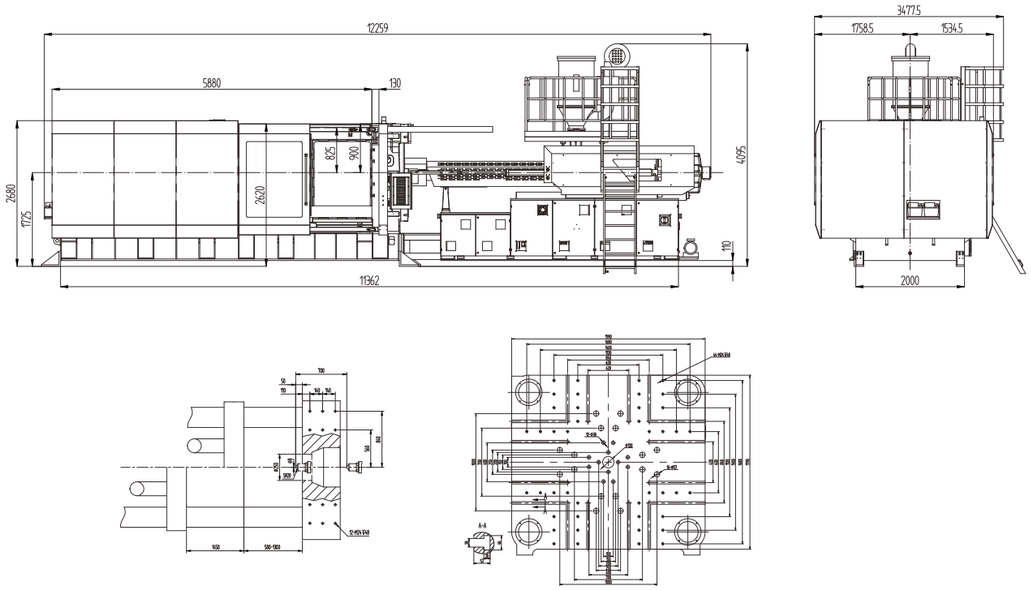

BL1400EKH

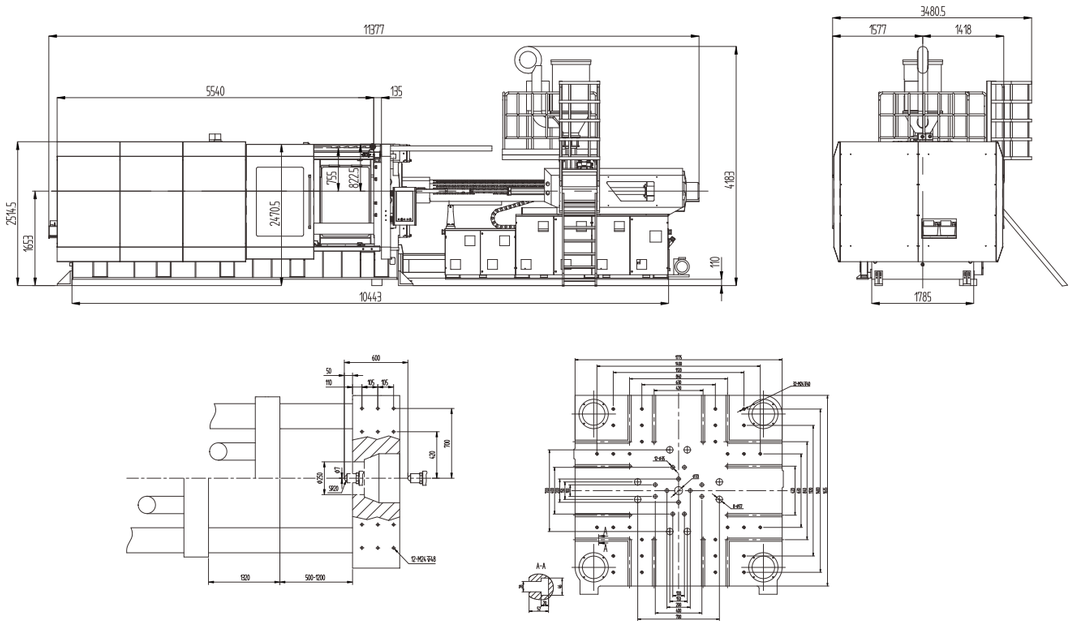

BL1200EKH

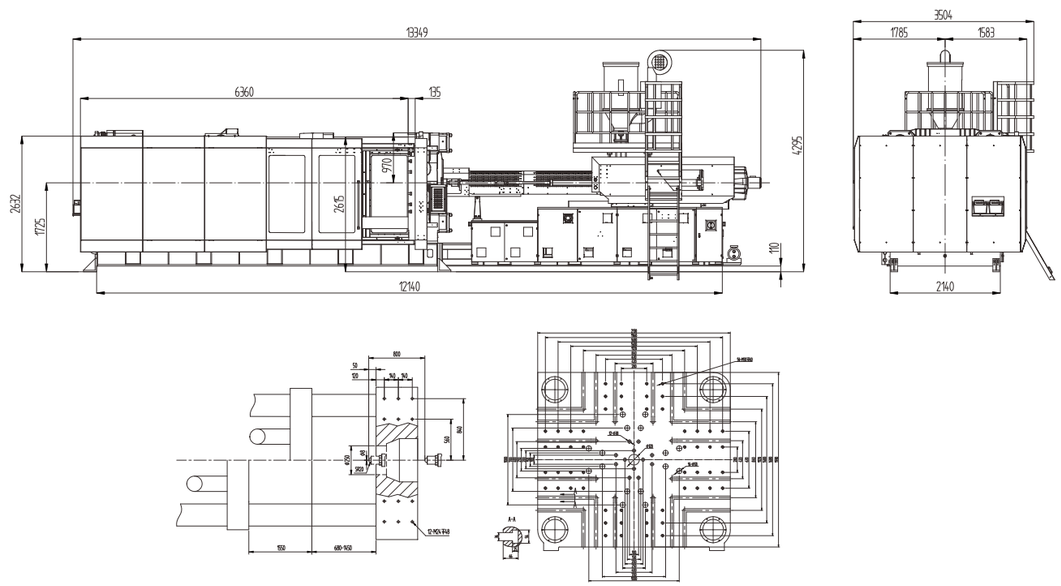

BL1600EKH

Machine Dimensions & Platen Dimensions

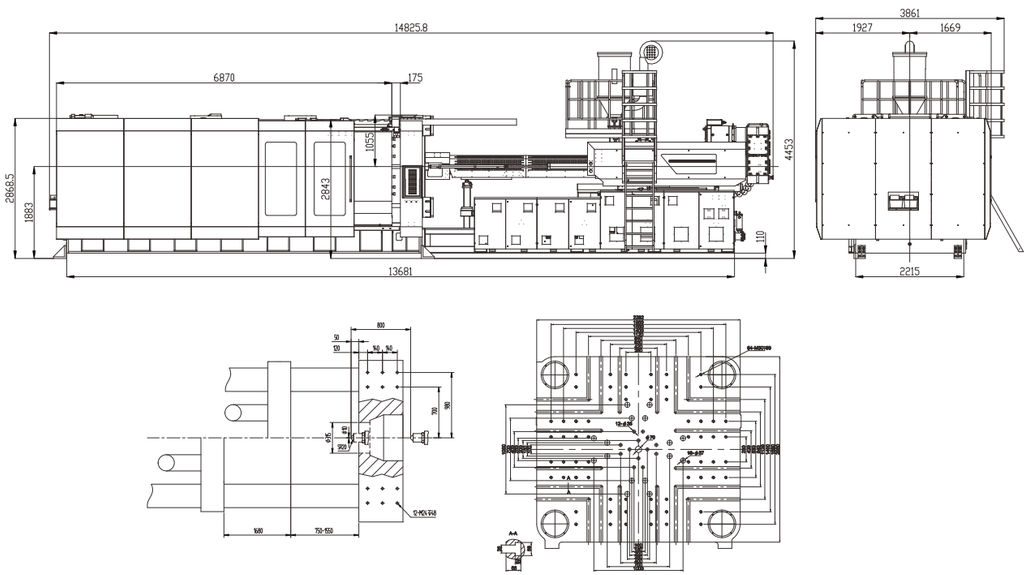

BL1850EKH/C22000

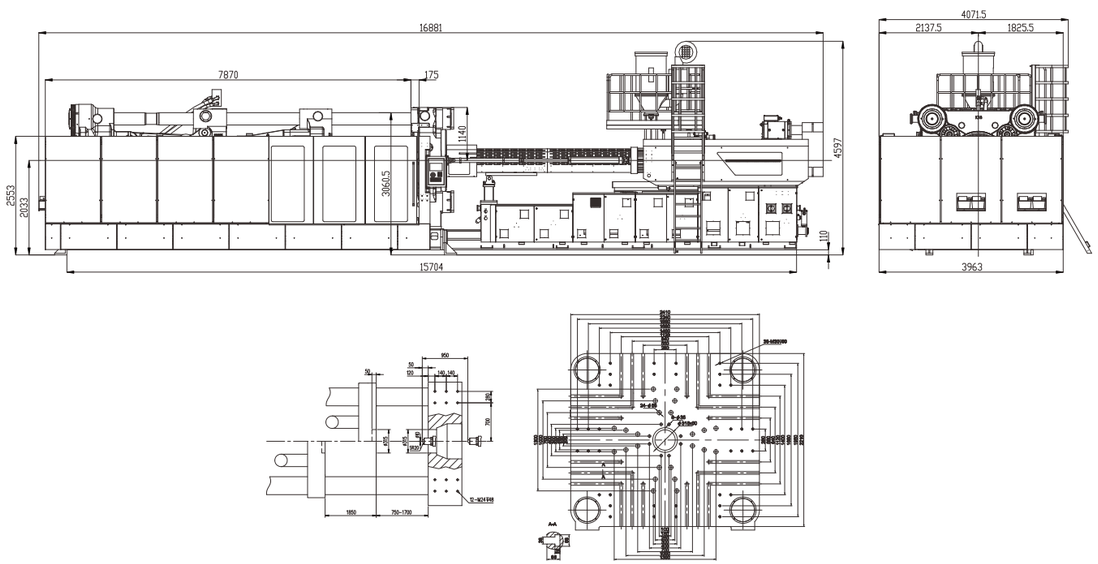

BL2200EKH/C35000

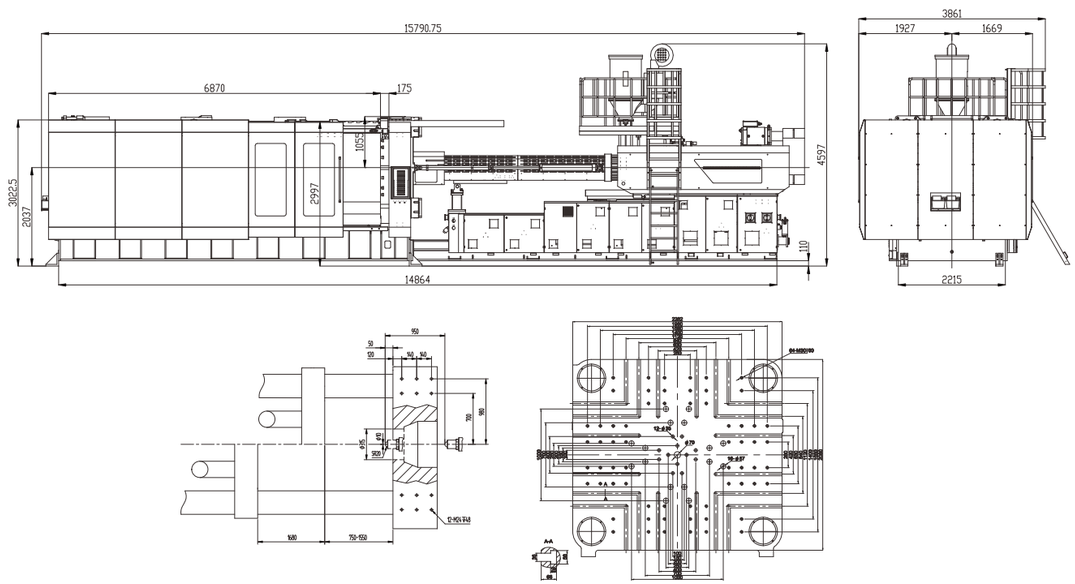

BL1850EKH/C35000

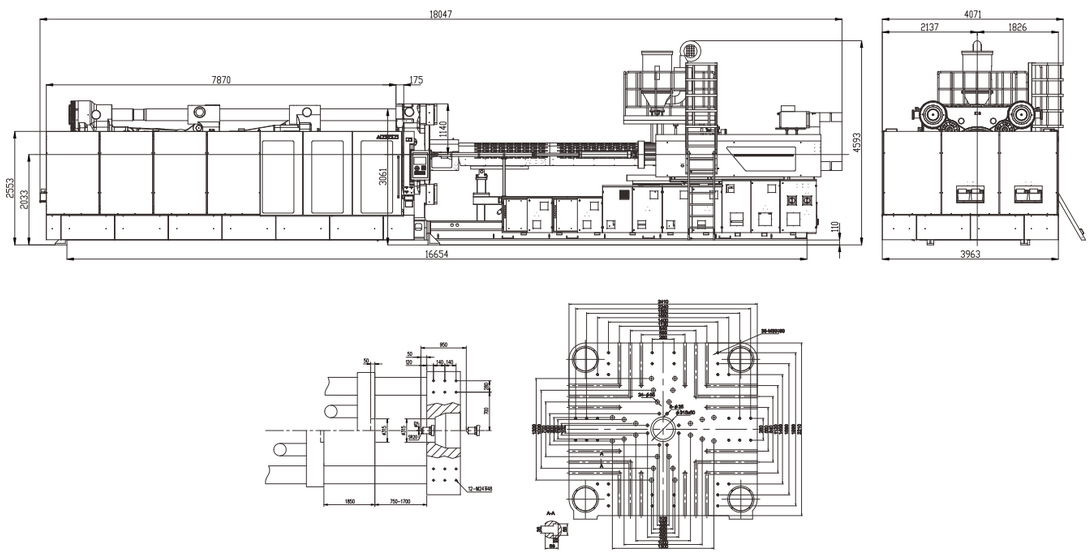

BL2200EKH/C54000

Machine Dimensions & Platen Dimensions

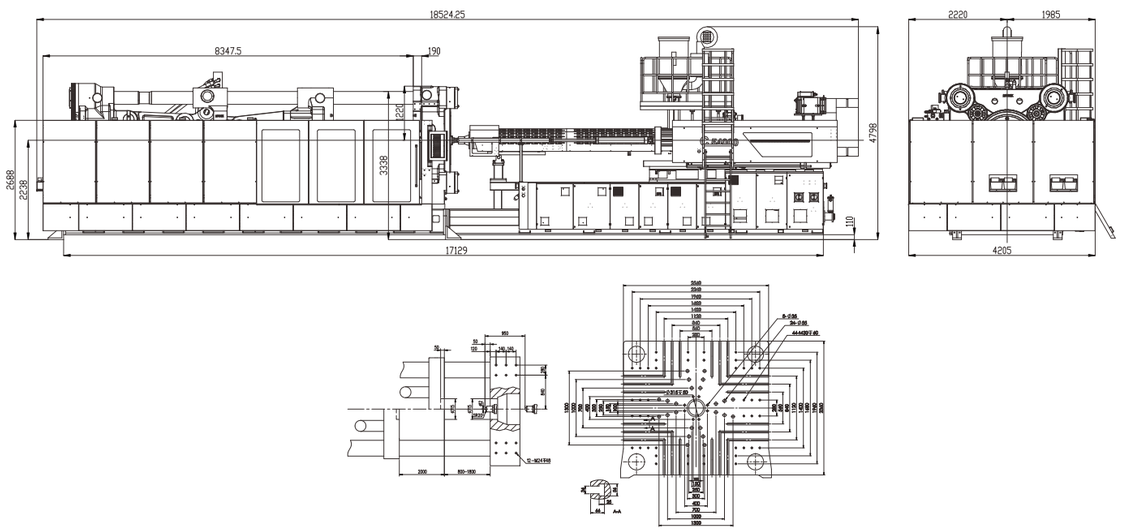

BL2500EKH/C54000

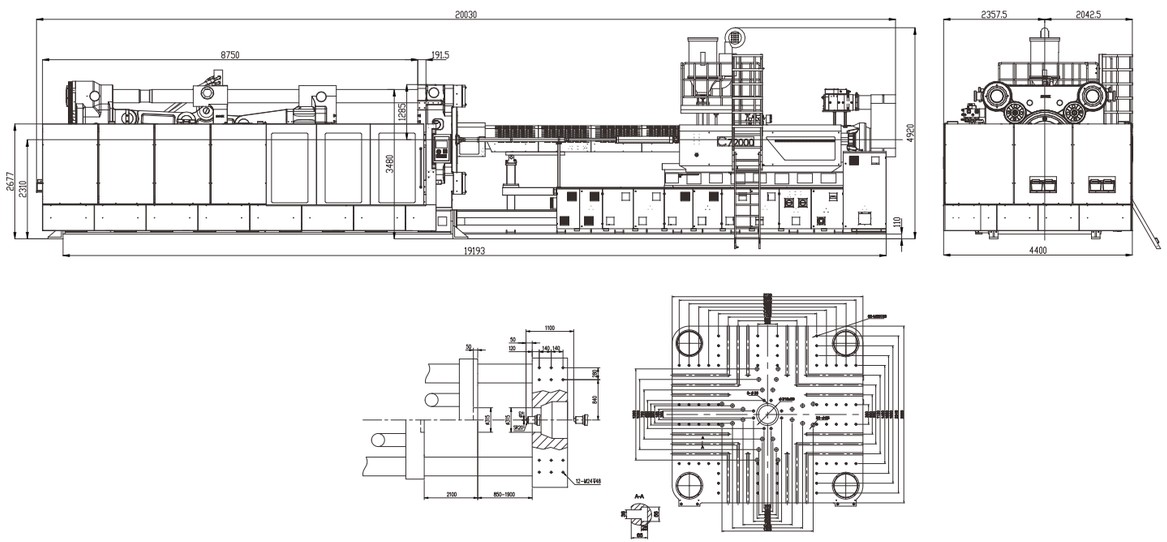

BL2800EKH/C72000

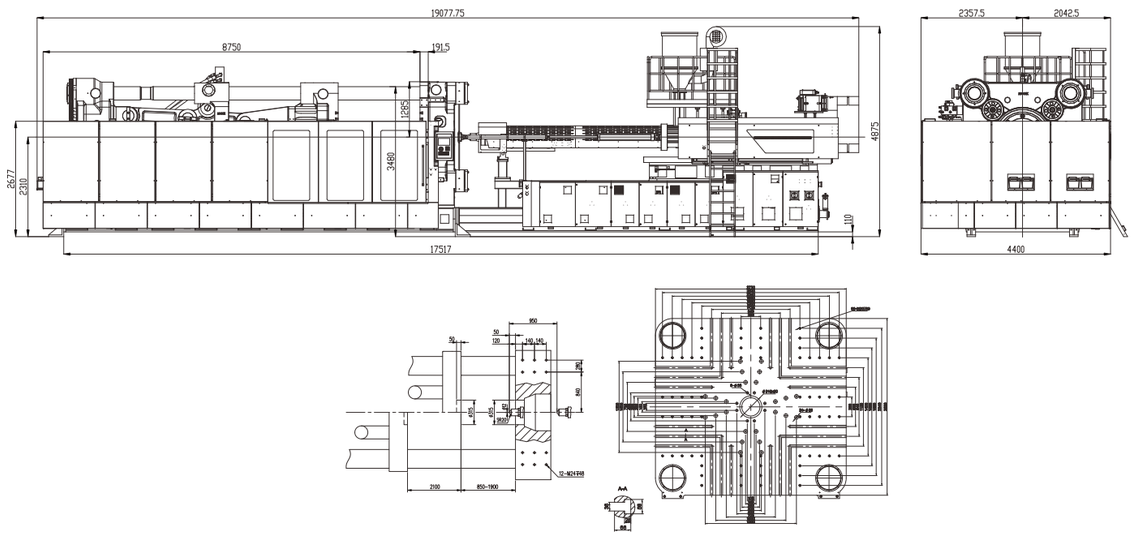

BL2800EKH/C54000

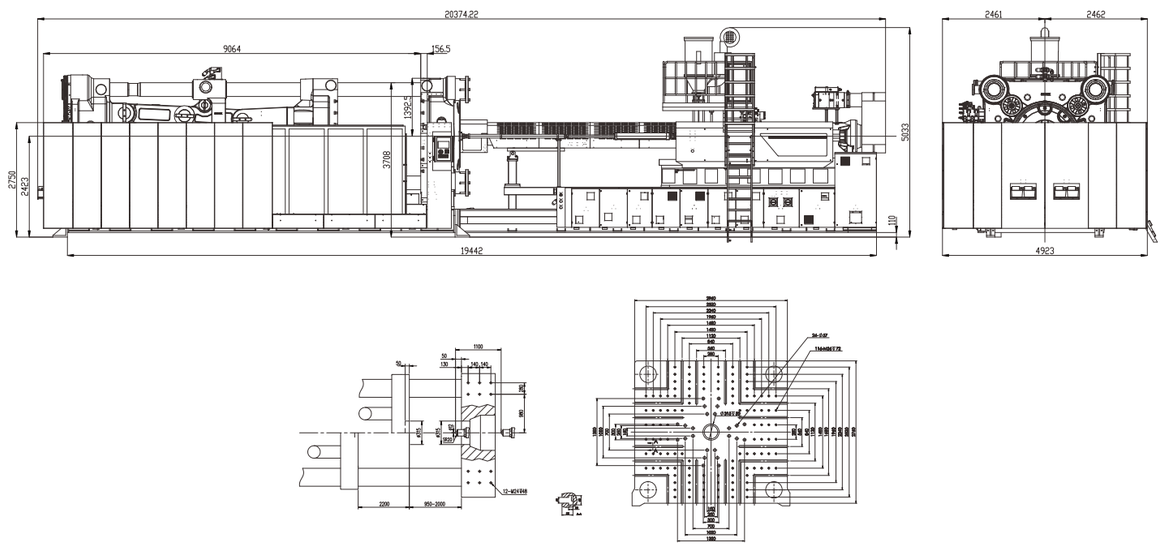

BL3300EKH/C72000

Machine Dimensions & Platen Dimensions

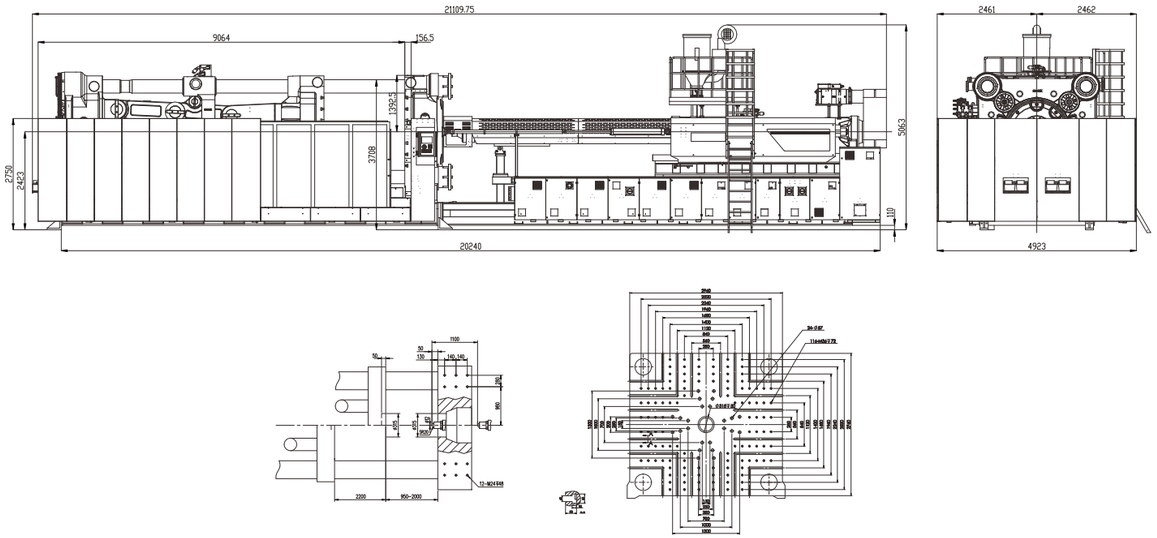

120-400EKH Platen Dimensions Optional

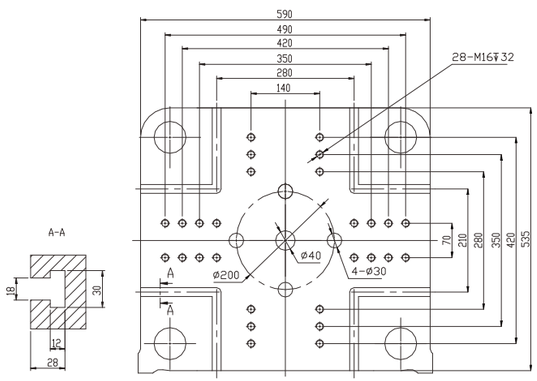

BL120EKH

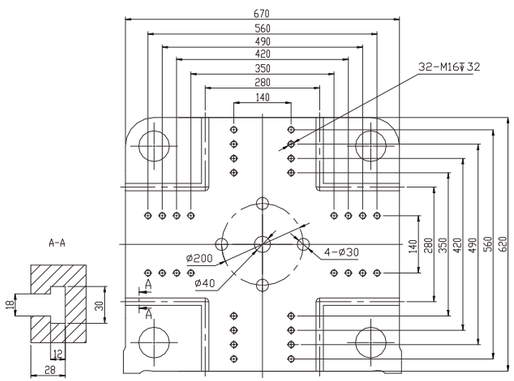

BL160EKH

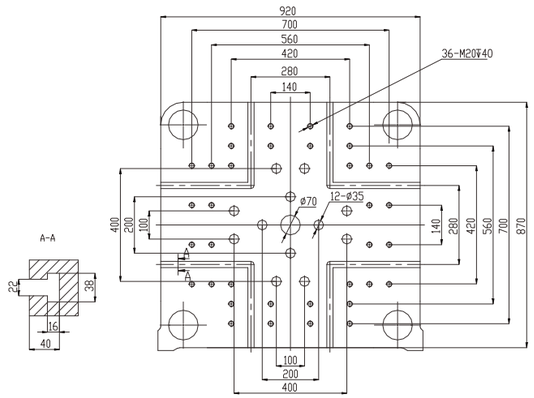

BL300EKH

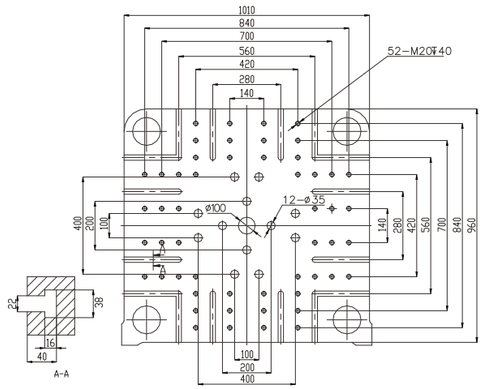

BL400EKH

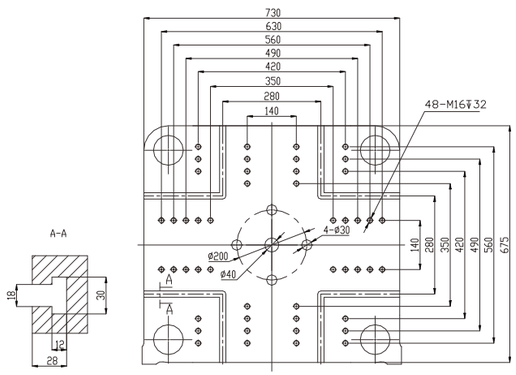

BL200EKH

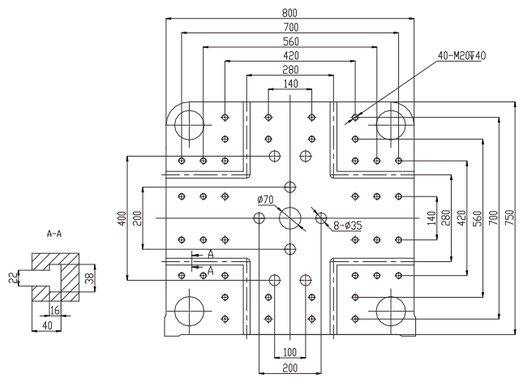

BL250EKH

Configuration List

Standard Configuration Menu of BL EKH series

Clamping Unit

- >> Patented five-point clamping mechanism with outward crankshaft get great opening stroke
- >> Widen platen design adapt to large-dimension mold
- >> High-precision and low-pressure protection mold function
- >> Hydraulic motor drives automatic gear for mold adjustment
- >> Adjustable support structure for moving platen reduces deformation of tie bar
- >> Mechanical, electrical, hydraulic two/three level safety protection device
- >> Equipped with mold safety pedal in the mold area (above BL1200EKH)
- >> Automatic safety door control (above BL700EKH)
- >> Mold opening and closing, ejecting movement are controlled by high-precision electronic ruler
- >> Various ejecting modes are optional, pressure and speed are set separately
- >> Synchronous ejection/core pulling function on machines BL2200EKH-4000EKH
- >> Five levels speed and the adjustable pressure for mold opening and closing
- >> Volumetric centralized lubrication system with automatic detection

Electrical Control Unit

- >> Process parameter presetting function
- >> With setting value reference and online operation auxiliary description function
- >> Optional robot interface
- >> Parameter data protection lock
- >> PID temperature automatic control, realize self-calibration of barrel temperature
- >> USB interface, convenient for panel program update and mold parameters backup
- >> With the memory function of machine stopping, it can store 200 groups of mold data randomly
- >> 100 sets of exception alerts and 100 sets of modification record stores
- >> Multi-level password protection,and new setting according to different authorization levels,to Prevent the wrong modifacation of molding parameters
- >> Input point and output point detection and I/O online simulation function, to quickly confirm the machine running status
- >> Multiple standby sockets (5-pin 32AX1 + 5-pin I6AX1 + 3-pin multi-function X1)
- >> Standard with the hopper and product-out detection for 120EKH-450EKH
- >> Emergency stop protection for front doors and backdoors for all series, mold areaemergency stop protection for 1200EKH-4000EKH
- >> Alarm light with audible prompt

Others

- >> Bole standard color
- >> Adjustable shock absorbers for the machine base
- >> Accessory box
- >> Common tools
- >> Damageable spare parts

Hydraulic Unit

- >> Servo energy saving system
- >> Oil temperature detection, and oil temperature deviation automatic alarm
- >> Motor overload protection function
- >> With self-sealing oil absorption filter for above 530EKH
- >> Core pulling device
  - 120-700EKH: Standard 1 set reserved 1 set (on movable platen)
  - 800-1850EKH: Standard 2 sets (on stationary platen) and 1 set reserved (on movable platen)
  - 2200-4000EKH:Standard 2 sets(1 set on stationary platen and 1 set on movable platen) and 2 sets reserved ((1 set on stationary platen and 1 set on movable platen)
- >> Quick plug for mold cooling water (Φ10)
  - 120-250EKH: Standard with 1 set, 4-4;
  - 300-450EKH: Standard with 1 set, 6-6;
  - 530-900EKH: Standard with 1 set, 9-9
  - 1000-4000EKH: Standard with 2 set,9-9 and 8-8

Injection Unit

- >> High-efficiency plasticizing screw and barrel with high-quality nitrided steel
- >> Screw anti-cold-start delay setting, timing heating and automatic heat preservation function
- >> High-quality and large-torque hydraulic motor
- >> Leakproof function when the screw is backward
- >> Twin carriage cylinder design
- >> High rigidity support structure for injection unit
- >> Trimming function of nozzle centralization
- >> High-precision electronic ruler to control the injection stroke
- >> Six-section injection, five-section pressure hold, five-section material charging, pressure/speed adjustable
- >> Screw speed detection
- >> Automatic material cleaning function
- >> Proportioned back pressure for plasticizing
- >> Centralized lubrication for 1000EKH and above
- >> Feeding platform for 1000EKH and above
- >> Additional extension nozzle (120EKH-700EKH extend 50mm, 800EKH-4000EKH extend 100mm)

Due to the continuous product improvement, we reserve the right to adjust the individual parameters, without notice.

Optional Configuration Menu of BL EKH series

Clamping Unit

- >> Bigger mould height
- >> Bigger eject force
- >> Bigger eject stroke
- >> Wider machine cover& door
- >> With mould open mechanical limit
- >> With mould heat shield plate
- >> Non-standard mould screw holes(Japanese standard, SPI, ect.)
- >> T slot platen(120-4000EKH)
- >> Mould hanging formwork
- >> Hydraulic/electric rotating demould device (twisted tooth device)

Injection Unit

- >> Increase/decrease of shot volume
- >> Bigger / smaller plasticizing motor
- >> Chrome plating/bimetallic screw components
- >> PVC,PET,PC,PA,bakelite,etc all kinds of special plasticizing unit
- >> Pneumatic/hydraulic/spring self-locking nozzle
- >> Accumulator inject(ACC)
- >> Gas-assisted/wit interface
- >> Sequential injection device
- >> Differential high-speed injection device
- >> Hot runner control built in

Hydraulic Unit

- >> Increase/decrease power system
- >> Increase the oil cooler
- >> The hydraulic/pneumatic core-pulling device
- >> Pneumatic ejection device
- >> Simultaneous ejection/core-pulling device
- >> Simultaneous plasticizing
- >> The oil temperature automatic control function
- >> The oil temperature preheating function
- >> Equipped with hydraulic/pneumatic core-pulling device
- >> Install bypass filter

Optional Auxiliary

- >> Robot
- >> Hopper dryer
- >> Dehumidifier
- >> Crusher
- >> Mould temperature controller
- >> Magnetic shelf
- >> Auto-loader
- >> Mould cooling flow meter glass tube

Electrical Control Unit

- >> The (Euro map) robot interface
- >> IML interface
- >> Change the voltage and frequency
- >> The change of control system
- >> Add working lamp
- >> Hot runner controllers

Due to the continuous product improvement, we reserve the right to adjust the individual parameters, without notice.