EKW Series

The Passionate Pursuit of Perfection

en.bole-machinery.com

BOLE Customer Service Center

BOLE MACHINERY

ADD: No.99 Weisan Road, Xiaogang, Ningbo, China

P.C: 315821

TEL: +86-574-86188007

FAX: +86-574-86188008

E-mail: bole-sales@bole-machinery.com

THIS CATALOGUE ARE PROTECT BY LAW OF COPY RIGHT.
ANY USE WITHOUT THE EXPRESS PERMISSION OF THE LAW OF COPY RIGHT,
MUST GET APPROVAL OF BOLE IN ADVANCE.

THIS VERSION WAS PRINTED IN Mar. 2022,
ANY DIFFERENCE SPECIFICATION FROM OLD VERSION SHOULD BE SUBLECT TO THIS VERSION.

EKW Series

EKW Hydraulic Servo Energy Saving Injection Moulding Machine

Injection Moulding Machine

EKW Series

EKW Hydraulic Servo Energy Saving Injection Moulding Machine

Large

With widen platen and central clamping toggle, at the same tonnage model, larger opening stroke, wider tie bar space and greater mold height.

Energy-saving

By sampling test, the application of the latest servo system technology for the same tonnage model to do the same product, under the same condition, Bole machines save 15% at least than the traditional servo energy saving machine;

It is recommended to choose the latest electric charging solution onto Bole. For the same tonnage model, the energy consumption of charging unit can save more than 35%, and the energy consumption of the whole machine can save more than 15%.

Accurate

Precision control adopts the latest hydraulic oil circuit design & patent intelligent software control. The repeat precision of opening/closing mold position reach ±0.5mm;

Injection unit adopts linear guide rail & special cylinder with low oil return resistance & patent intelligent software control, and the repeat accuracy of injection weight reach 0.2% according to the new international standard GB/T25156-2020.

Efficient

By sampling test, Bole central clamping structure can save 2-5% raw materials for more than 80% of molds. For example, using the same mold with the same amount of raw materials to do 100 pcs, Bole machine can produce 102-105 pcs.

With Germany design plasticizing unit, plasticizing efficiency is greater, saving the charging time.

Large
(under the condition of the same tonnage)

Large

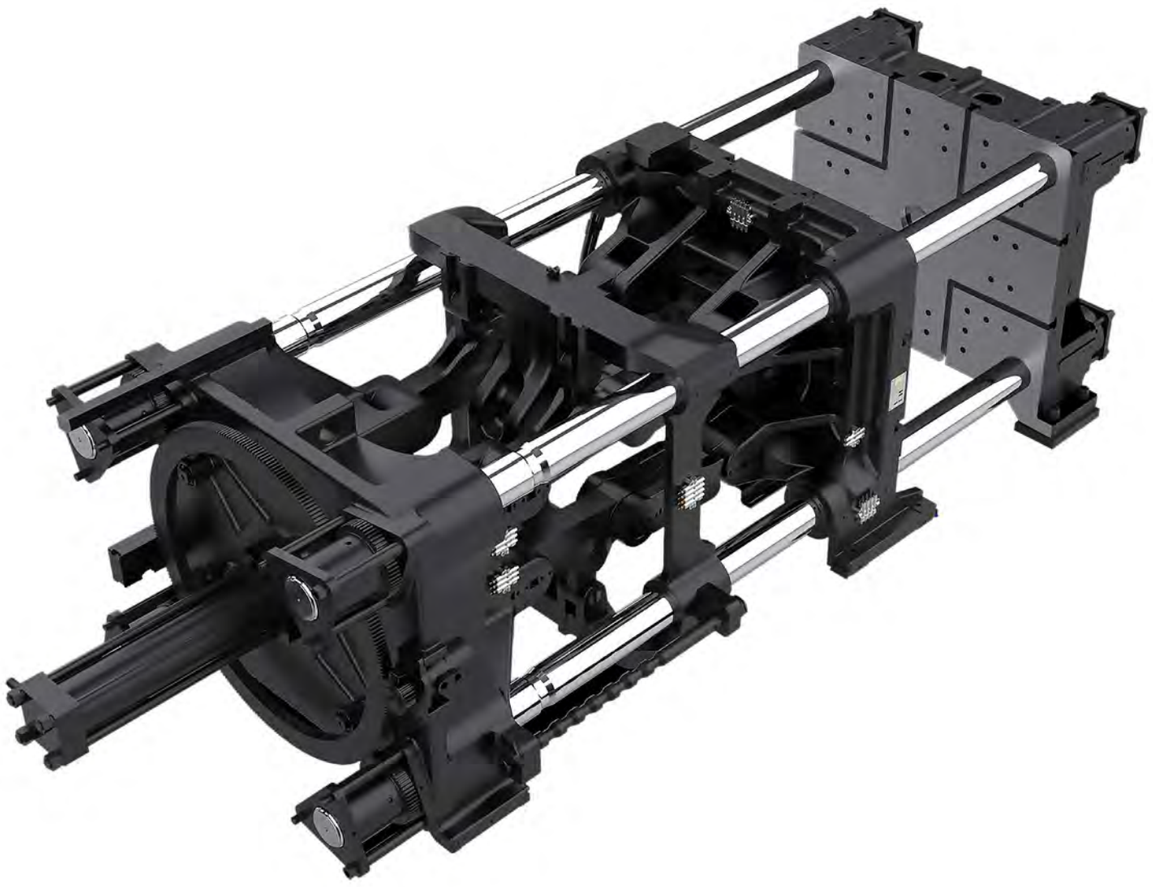

- 1. Larger opening stroke. At the same tonnage models, with widen-platen central-clamping structure, opening stroke is larger than peers, suitable for installation of larger mold (Especially deep-cavity mold).
- 2. Wider tie bar space. Applied more mold dimension range and higher mold applicability; the platen structure can protect the mold better and extend mold life.

- 3. Large mold capacity: suitable for larger mold dimension range

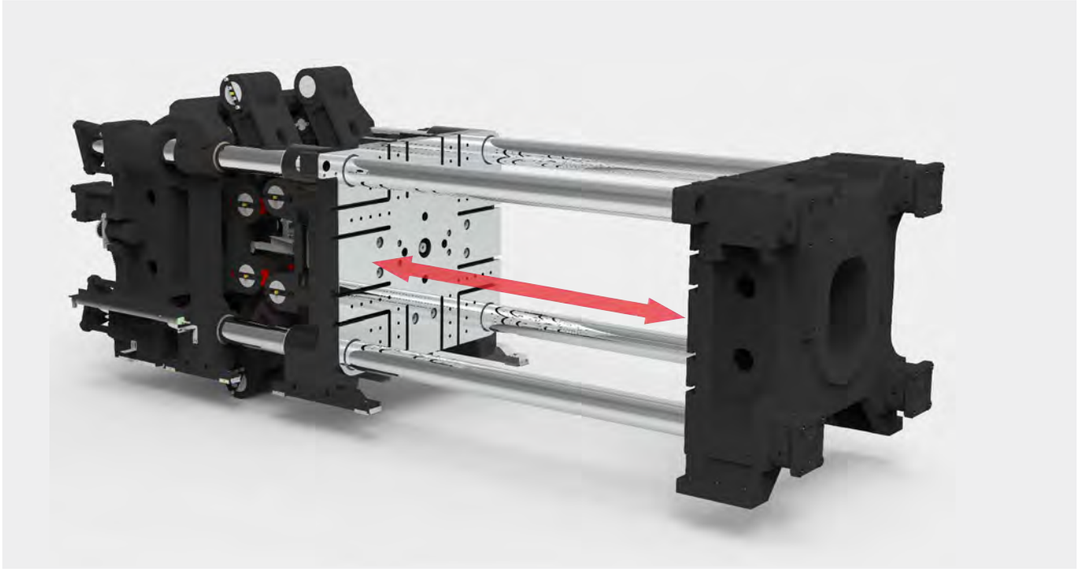

Large
(under the condition of the same tonnage)

Energy-saving

High efficiency, energy saving and zero emission

The latest electric charging solution is optional.
With patented control technology and the latest servo system, for the same tonnage model, the energy consumption of the whole machine can save more than 15%.

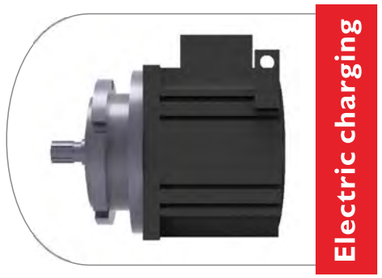

Energy-saving

1.Adopt the latest servo system technology
2.Recommend the latest electric charging solution
3.Patented control technology

By sampling test, the application of the latest servo system technology for the same tonnage model to do the same product, under the same condition, Bole machines save 15% at least than the traditional servo energy saving machine;

It is recommended to choose the latest electric charging solution onto Bole. For the same tonnage model, the energy consumption of charging unit can save more than 35%, and the energy consumption of the whole machine can save more than 15%.

Reduce energy consumption and meet Energy Saving and Environment Friendly

Accurate

1.Precision control adopts the latest hydraulic oil circuit design & patent intelligent software control, to guarantee the repeat precision of opening/closing mold position ±0.5mm; and the repeat accuracy of injection weight 0.2% according to the new international standard GB/T25156-2020.

Intelligent algorithm for mold opening/closing

Two important factors for accuracy

Patent intelligent software control and unique oil circuit design guarantee factors for accuracy.

Efficient Stable Accurate

中华人民共和国国家版权局

计算机软件著作权登记证书

软 件 名 称：双马注塑机开模智能定位控制软件 V1.0

著 作 权 人：宁波双马机械工业有限公司

开发完成日期：2019年02月05日

首次发表日期：未发表

权利取得方式：原始取得

权 利 范 围：全部权利

登 记 号：2019SR0421847

根据《计算机软件保护条例》和《计算机软件著作权登记办法》的规定，经中国版权保护中心审核，对以上事项予以登记。

2.Human-computer interaction

Equipped with OPC interface of intelligent Internet of Things management system, and open a new era of intelligent factory

- Highly automatic, intelligent, modern injection molding machine computer, contributes to the central data collection, analysis and backup. Meanwhile working with robot, mold temperature controllor and other auxiliaries, to realize data interaction and full-line automation. It can form an Internet of things management solution on injection molding machine for customer; Friendly, simple operation software, is easy for users to master the machine production status at any time and place , reach the response quickly and timely, and ensure the highest level of production.
- Adopt EST/B&R controller, with large screen controller, friendly UI interface, better information transmission and optional industrial interface (U77, OPC, MES extra charge)
- With I/O input/output short-circuit protection

- Patented software algorithm combined with a unique mold closure oil path design to ensure accuracy of two dimensional indicators
- Standard high-end controller, self-developed control software, high control precision, high degree of intelligence, high scalability
- Main electrical components are schneider, LS, Chint, Omron and other high-end brands, service life and stability greatly improved.
- Electric control box adopts strong current and weak current separation design, enhances anti-interference ability; quick-plug type pipeline layout make installation and maintenance easy.

BOLE Intelligent Machinery

OPC Interface Of Intelligent Internet Of Things
Management System Create a New Era Of Intelligent Factory

Human-Computer Interaction

Accurate

03

- The whole machine adopts high-performance hose, remove steel pipe welding, to prevent oil leakage;

- Injection speed-up function: using the latest servo system, highly improve response speed by 30-50ms;

  System pressure improves to 17.5 Mpa, and the injection pressure and speed are greater.
  With One-button-acceleration function, the machine speed can be increased up to 15% under the previous configuration.

04

05

- Improve efficiency and extend servo motor life: oil-cooled type motor is used above the machine 530T. The heat dissipation effect is greatly improved, and the motor life is longer;

- New injection cylinder design makes the oil return resistance close to zero. Meanwhile the whole series of injection unit are standard with linear slide rail, effectively reduce the friction of the injection part, greatly improve the control precision and stability of the injection unit.

06

Accurate

Accurate 07-08

- **From the plasticizing system designed in Germany, plasticizing efficiency is more than 20% above the other Chinese brands**

  For ABS, PS, PP and other common plastic material, it is customized for a variety of complex process requirements.

- **Enhance plasticizing structure, with more stable operation and longer life.**

9.Plasticizing components from German design

10. Plasticizing system from German design

Efficient

Central Clamping structure - Invention Patent in China

(Patent No.: ZL2011 10250342.5)

- Improve rigidity (clamping part optimization, improve the rigidity, further extend the lifetime of the machine.
- The center hole of the stationary platen is reduced according to the new national industry standard of China, and the rigidity of the middle position is increased.
- With plasticizing unit designed from Germany, save plasticizing time, improve plasticizing efficiency.

Toggle System Comparison

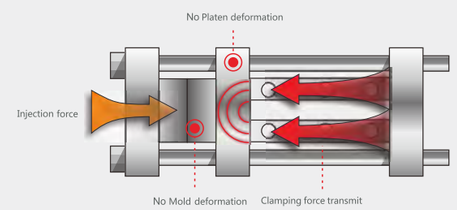

BOLE

BOLE central clamping structure

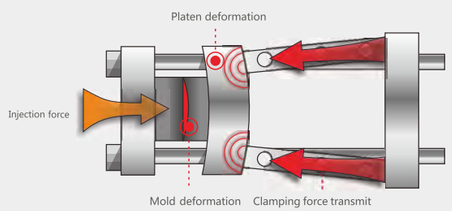

Others

Tradition Toggle system

01 High clamping force efficiency

By sample testing, the clamping force utilization rate with Bole central clamping structure reaches 100%, while that of traditional toggle machine only reaches 80-85%.

02 Raw Material Saving

Compared with traditional structure, Bole central clamping structure can save 2%-5% of raw materials for more than 80% of molds.

03 High accuracy and less flash

AI intelligent control

Positioning repeatability accuracy of mold opening and closing ±0.5mm

Product weight repetition accuracy ≤0.3%

Fewer flash than traditional structures

04 Protection to mold and platen

With the latest clamping structure of EKW, make uniform force on the platen with less deformation; Precise low pressure function for mold closing, proportional pressure control and equal stress platen structure technology, can protect the mold and extend the mold life.

05 High flexibility for mold range

The latest clamping structure of EKW, make uniform force on platen, reduce the deformation, to be suitable for larger mold size range and applicability.

06 Greater opening stroke

At the same tonnage model, central clamping structure of EKW provide mold opening stroke greater, to install large-dimension mold (especially deep cavity mold).

Technical Data

DESCRIPTION	UNIT	BL100EKW/C340			BL120EKW/C470			BL160EKW/C630			BL200EKW/C910			BL250EKW/C1250		
International specification		C340			C470			C630			C910			C1250		
Screw specification		A	B	C	A	B	C	A	B	C	A	B	C	A	B	C
Screw diameter	mm	32	36	40	36	40	45	40	45	50	45	50	55	50	55	60
Screw ratio	L/D	23.0	20.4	18.4	23.0	20.7	18.4	23.0	20.4	18.4	23.0	20.7	18.8	23.0	20.9	19.2
Theoretical injection capacity	cm^3	145	183	226	203	251	318	283	358	442	397	491	594	530	641	763
Shot weight(PS)	g	133	168	208	187	231	292	260	329	406	366	451	546	487	590	702
	oz	4.7	6.0	7.3	6.6	8.2	10.3	9.2	11.6	14.4	12.9	15.9	19.3	17.2	20.8	24.8
Injection rate into Air	cm^3/s	96	122	150	127	156	198	163	207	255	200	247	299	248	300	357
	g/s	87	111	137	115	142	180	149	188	232	182	225	272	226	273	325
Injection pressure	Mpa	239	189	153	230	186	147	223	176	143	230	186	154	235	194	163
Theoretical plasticizing speed	g/s (PS)	11	14	19	14	18	25	18	25	33	27	35	46	44	58	73
Injection stroke	mm	180			200			225			250			270		
Max. injection speed	mm/s	119			125			130			126			126		
Max. screw rotate speed	r/min	221			210			210			221			280		
Sys. Pressure	MPa	17.5			17.5			17.5			17.5			17.5		
Pump Motor(Min～Max)	kW	8.9～15			13.4～18.7			16.4～23			20.5～27.8			26.5～36.5		
Heater power	kW	5.4			8.7			13.65			13.95			14.85		
Number of temp. control zones		3+1			3+1			3+1			3+1			4+1		
Clamping force	kN	1000			1200			1600			2000			2500		
Opening stroke	mm	335			380			450			500			570		
Space between tie bar	mmXmm	405x325			455x355			505x405			555x455			605x505		
Min. Mould height (T-slot)	mm	150			160			180			200			220		
Max. Mould height (T-slot)	mm	390			450			510			550			600		
Max. Platen distance (T-slot)	mm	725			830			960			1050			1170		
Ejector stroke	mm	110			120			140			150			150		
Ejector force forward	kN	34			34			49			49			67		
Ejector force back	kN	22			22			37			37			39		
Number of ejector bar	PC	5			5			5			5			9		
Oil tank capacity	L	120			125			165			195			205		
Machine dimensions(L×W×H)	mXmXm	4.2x1.3x2.1			4.9x1.5x2			5.2x1.6x2.1			5.3x1.6x2.3			6x1.7x2.4		

Note 1: Energy consumption grade according to GB/T30200-2013 standard, according to PP material test.
Note 2: Theoretical plasticizing capacity is calculated theoretically.

Due to the continuous product improvement, we reserve the right to adjust the individual parameters, without notice.

Technical Data

DESCRIPTION	UNIT	BL300EKW/C1450			BL360EKW/C2080			BL400EKW/C2500			BL470EKW/C3200			BL530EKW/C4500		
International specification		C1450			C2080			C2500			C3200			C4500		
Screw specification		A	B	C	A	B	C	A	B	C	A	B	C	A	B	C
Screw diameter	mm	55	60	65	60	65	75	65	70	75	70	75	85	80	85	95
Screw ratio	L/D	23.0	21.1	19.5	23.0	21.2	18.4	23.0	21.4	19.9	23.0	21.5	18.9	23.0	21.6	19.4
Theoretical injection capacity	cm^3	689	820	962	918	1078	1435	1194	1385	1590	1500	1722	2212	2211	2496	3117
Shot weight(PS)	g	634	754	885	845	992	1320	1098	1274	1462	1380	1584	2035	2034	2296	2868
	oz	22.4	26.6	31.3	29.9	35.0	46.7	38.8	45.0	51.7	48.8	56.0	71.9	71.9	81.1	101.3
Injection rate into Air	cm^3/s	276	328	385	322	378	503	352	408	469	430	493	634	579	653	816
	g/s	251	299	351	293	344	458	320	372	427	391	449	576	526	594	742
Injection pressure	Mpa	211	178	151	226	193	145	207	179	156	212	185	144	202	179	143
Theoretical plasticizing speed	g/s (PS)	44	55	69	46	58	85	58	65	80	66	79	101	74	87	118
Injection stroke	mm	290			325			360			390			440		
Max. injection speed	mm/s	116			114			106			112			115		
Max. screw rotate speed	r/min	210			175			175			164			134		
Sys. Pressure	MPa	17.5			17.5			17.5			17.5			17.5		
Pump Motor(Min～Max)	kW	26.7～36.5			38.8～40.9			38.8～40.9			47.2～50.7			57.3～65		
Heater power	kW	20			24.3			25.9			27.35			32		
Number of temp. control zones		4+1			4+1			4+1			4+1			5+1		
Clamping force	kN	3000			3600			4000			4700			5300		
Opening stroke	mm	610			660			710			800			900		
Space between tie bar	mmXmm	705x575			755x605			805x625			855x655			905x705		
Min. Mould height (T-slot)	mm	250			250			270			330			330		
Max. Mould height (T-slot)	mm	660			730			730			810			880		
Max. Platen distance (T-slot)	mm	1270			1390			1440			1610			1780		
Ejector stroke	mm	190			190			190			210			220		
Ejector force forward	kN	67			123			123			123			123		
Ejector force back	kN	39			82			82			82			82		
Number of ejector bar	PC	13			13			13			13			21		
Oil tank capacity	L	275			320			420			420			600		
Machine dimensions(L×W×H)	mXmXm	6.5x1.8x2.3			7x1.9x2.3			7x1.8x2.5			7.7x1.9x2.6			8.3x2.1x2.9		

Note 1: Energy consumption grade according to GB/T30200-2013 standard, according to PP material test.
Note 2: Theoretical plasticizing capacity is calculated theoretically.

Due to the continuous product improvement, we reserve the right to adjust the individual parameters, without notice.

Technical Data

DESCRIPTION	UNIT	BL600EKW/C4500			BL700EKW/C5900			BL800EKW/C8000			BL900EKW/C8000			BL1000EKW/C10300		
International specification		C4500			C5900			C8000			C8000			C10300		
Screw specification		A	B	C	A	B	C	A	B	C	A	B	C	A	B	C
Screw diameter	mm	80	85	95	80	90	100	90	100	110	90	100	110	100	110	120
Screw ratio	L/D	23.0	21.6	19.4	23.6	21.0	18.9	23.0	20.7	18.8	23.0	20.7	18.8	23.0	20.9	19.2
Theoretical injection capacity	cm^3	2211	2496	3117	2512	3179	3925	3497	4318	5224	3497	4318	5224	4710	5699	6782
Shot weight(PS)	g	2034	2296	2868	2311	2925	3611	3217	3972	4806	3217	3972	4806	4333	5243	6240
	oz	71.9	81.1	101.3	81.7	103.4	127.6	113.7	140.4	169.8	113.7	140.4	169.8	153.1	185.3	220.5
Injection rate into Air	cm^3/s	579	653	816	618	783	966	793	979	1185	793	979	1185	830	1004	1195
	g/s	526	594	742	563	712	879	722	891	1078	722	891	1078	755	914	1087
Injection pressure	Mpa	202	179	143	236	186	151	230	186	154	230	186	154	220	182	153
Theoretical plasticizing speed	g/s (PS)	74	87	118	81	118	160	133	180	234	133	180	234	136	176	211
Injection stroke	mm	440			500			550			550			600		
Max. injection speed	mm/s	115			123			125			125			106		
Max. screw rotate speed	r/min	134			150			169			169			122		
Sys. Pressure	MPa	17.5			17.5			17.5			17.5			17.5		
Pump Motor(Min～Max)	kW	65～67.1			75.1～81.8			91.6～92.6			91.6～92.6			92.6～101.4		
Heater power	kW	32			43			50.1			50.1			56.2		
Number of temp. control zones		5+1			5+1			5+1			5+1			6+1		
Clamping force	kN	6000			7000			8000			9000			10000		
Opening stroke	mm	940			1020			1080			1160			1250		
Space between tie bar	mmxmm	955x755			1010x805			1060x860			1110x910			1210x960		
Min. Mould height (T-slot)	mm	380			400			450			450			500		
Max. Mould height (T-slot)	mm	950			980			1000			1100			1200		
Max. Platen distance (T-slot)	mm	1890			2000			2080			2260			2450		
Ejector stroke	mm	220			260			280			300			300		
Ejector force forward	kN	123			166			166			232			248		
Ejector force back	kN	82			117			117			132			165		
Number of ejector bar	PC	21			21			21			21			21		
Oil tank capacity	L	750			900			1070			1070			1350		
Machine dimensions(L×W×H)	mXmXm	9.1x2.2x2.9			9.6x2.3x3			10.4x2.5x3.1			10.8x2.6x3.1			10.9x2.9x4.2		

Note 1: Energy consumption grade according to GB/T30200-2013 standard, according to PP material test.
Note 2: Theoretical plasticizing capacity is calculated theoretically.

Due to the continuous product improvement, we reserve the right to adjust the individual parameters, without notice.

Technical Data

DESCRIPTION	UNIT	BL1200EKW/C10300			BL1300EKW/C13300			BL1400EKW/C13300			BL1600EKW/C17100			BL1850EKW/C18300		
International specification		C10300			C13300			C13300			C17100			C18300		
Screw specification		A	B	C	A	B	C	A	B	C	A	B	C	A	B	C
Screw diameter	mm	100	110	120	110	120	130	110	120	130	130	140	150	130	140	150
Screw ratio	L/D	23.0	20.9	19.2	22.9	21.0	19.4	22.9	21.0	19.4	22.6	21.0	19.6	22.6	21.0	19.6
Theoretical injection capacity	cm^3	4710	5699	6782	6174	7348	8623	6174	7348	8623	9021	10462	12011	9618	11155	12805
Shot weight(PS)	g	4333	5243	6240	5680	6760	7933	5680	6760	7933	8300	9625	11050	8849	10262	11781
	oz	153.1	185.3	220.5	200.7	238.9	280.3	200.7	238.9	280.3	293.3	340.1	390.4	312.7	362.6	416.3
Injection rate into Air	cm^3/s	830	1004	1195	1085	1291	1515	1085	1291	1515	1378	1598	1834	1378	1598	1834
	g/s	755	914	1087	987	1175	1379	987	1175	1379	1254	1454	1669	1254	1454	1669
Injection pressure	Mpa	220	182	153	215	181	154	215	181	154	191	164	143	191	164	143
Theoretical plasticizing speed	g/s (PS)	136	176	211	180	215	261	180	215	261	216	271	326	226	271	326
Injection stroke	mm	600			650			650			680			725		
Max. injection speed	mm/s	106			114			114			104			104		
Max. screw rotate speed	r/min	122			124			124			111			111		
Sys. Pressure	MPa	17.5			17.5			17.5			17.5			17.5		
Pump Motor(Min～Max)	kW	92.6～101.4			117.5～122.7			117.5～122.7			140.1～142.3			140.1～142.3		
Heater power	kW	56.2			56.2			56.2			74.6			80		
Number of temp. control zones		6+1			6+1			6+1			6+1			6+2		
Clamping force	kN	12000			13000			14000			16000			18500		
Opening stroke	mm	1350			1410			1530			1650			1700		
Space between tie bar	mmxmm	1310x1010			1360x1060			1460x1160			1560x1220			1660x1310		
Min. Mould height (T-slot)	mm	550			600			700			700			780		
Max. Mould height (T-slot)	mm	1260			1300			1400			1500			1600		
Max. Platen distance (T-slot)	mm	2610			2710			2930			3150			3300		
Ejector stroke	mm	350			350			350			400			400		
Ejector force forward	kN	248			248			248			363			363		
Ejector force back	kN	165			165			165			280			280		
Number of ejector bar	PC	21			29			29			29			29		
Oil tank capacity	L	1350			1650			1650			1650			1650		
Machine dimensions(L×W×H)	mXmXm	11.4x3x4.2			12.3x3.3x4.1			12.3x3.3x4.1			13.4x3.4x4.3			14.9x3.9x4.5		

Note 1: Energy consumption grade according to GB/T30200-2013 standard, according to PP material test.
Note 2: Theoretical plasticizing capacity is calculated theoretically.

Due to the continuous product improvement, we reserve the right to adjust the individual parameters, without notice.

Technical Data

DESCRIPTION	UNIT	BL1850EKW/C25000		BL2100EKW/C25000		BL2100EKW/C36000		BL2100EKW/C58000		BL2500EKW/C58000		BL2500EKW/C72000	
International specification		C25000		C25000		C36000		C58000		C58000		C72000	
Screw specification		A	B	A	B	A	B	A	B	A	B	A	B
Screw diameter	mm	140	160	140	160	160	180	190	210	190	210	200	220
Screw ratio	L/D	24.0	21.0	24.0	21.0	23.6	21.0	23.0	21.0	23.0	21.0	23.0	21.0
Theoretical injection capacity	cm^3	14155	18488	14155	18488	22508	28486	36840	45004	36840	45004	43960	53192
Shot weight(PS)	g	13023	17009	13023	17009	20707	26207	33893	41404	33893	41404	40443	48936
	oz	460.2	601.0	460.2	601.0	731.7	926.0	1197.6	1463.0	1197.6	1463.0	1429.1	1729.2
Injection rate into Air	cm^3/s	1489	1945	1489	1945	2048	2592	2223	2716	2223	2716	2151	2602
	g/s	1355	1770	1355	1770	1864	2359	2023	2471	2023	2471	1957	2368
Injection pressure	Mpa	176	135	176	135	158	125	157	129	157	129	163	135
Theoretical plasticizing speed	g/s (PS)	195	303	195	303	269	326	345	441	345	441	383	485
Injection stroke	mm	920		920		1120		1300		1300		1400	
Max. injection speed	mm/s	97		97		102		78		78		68	
Max. screw rotate speed	r/min	86		86		71		63		63		63	
Sys. Pressure	MPa	17.5		17.5		17.5		17.5		17.5		17.5	
Pump Motor(Min～Max)	kW	140.1～142.3		140.1～142.3		164.7 ～172.6		182.5～193		182.5～193		182.5～193	
Heater power	kW	80		80		131		191.5		191.5		222.8	
Number of temp. control zones		6+2		6+2		7+1		8+1		8+1		8+1	
Clamping force	kN	18500		21000						25000			
Opening stroke	mm	1700		1850						2000			
Space between tie bar	mmxmm	1660x1310		1760 ×1360						1860x1460			
Min. Mould height (T-slot)	mm	780		780						800			
Max. Mould height (T-slot)	mm	1600		1700						1800			
Max. Platen distance (T-slot)	mm	3300		3550						3800			
Ejector stroke	mm	400		450						500			
Ejector force forward	kN	363		463.0						465.0			
Ejector force back	kN	280		365						365			
Number of ejector bar	PC	29		33						33			
Oil tank capacity	L	1950		1950		1970		1950		1320		1950	
Machine dimensions(L×W×H)	mXmXm	15.8x3.9x4.6		16x4.1x4.6		16.6x 3.7x4.2		18.1x4.1x4.6		18.6x3.7x4.5		18.6x4.3x4.8	

Note 1: Energy consumption grade according to GB/T30200-2013 standard, according to PP material test.
Note 2: Theoretical plasticizing capacity is calculated theoretically.

Due to the continuous product improvement, we reserve the right to adjust the individual parameters, without notice.

Technical Data

DESCRIPTION	UNIT	BL2800EKW/C72000		BL2800EKW/C88000		BL3300EKW/C88000		BL3300EKW/C110000		BL4000EKW/C110000		BL5500EKW/C110000	
International specification		C72000		C88000		C88000		C110000		C110000		C110000	
Screw specification		A	B	A	B	A	B	A	B	A	B	A	B
Screw diameter	mm	200	220	220	240	220	240	240	260	240	260	250	270
Screw ratio	L/D	23.0	21.0	23.0	20.5	23.0	20.5	23.0	21.0	23.0	21.0	23.0	21.0
Theoretical injection capacity	cm^3	43960	53192	56991	67824	56991	67824	74606	87559	74606	87559	80953	94424
Shot weight(PS)	g	40443	48936	52432	62398	52432	62398	68638	80554	68638	80554	74477	86870
	oz	1429.1	1729.2	1852.7	2204.9	1852.7	2204.9	2425.4	2846.4	2425.4	2846.4	2631.7	3069.6
Injection rate into Air	cm^3/s	2151	2602	2368	2819	2368	2819	3137	3682	3137	3682	3404	3971
	g/s	1957	2368	2155	2565	2155	2565	2855	3351	2855	3351	3098	3613
Injection pressure	Mpa	163	135	154	129	154	129	149	127	149	127	137	118
Theoretical plasticizing speed	g/s (PS)	383	485	481	626	481	626	626	764	626	764	680	825
Injection stroke	mm	1400		1500		1500		1650		1650		1650	
Max. injection speed	mm/s	68		62		62		69		69		69	
Max. screw rotate speed	r/min	63		63		63		63		63		63	
Sys. Pressure	MPa	17.5		17.5		17.5		17.5		17.5		17.5	
Pump Motor(Min～Max)	kW	182.5～193		185.2～202.8		185.2 ～202.8		235～253.5		235～253.5		235～253.5	
Heater power	kW	222.8		233		233		233		233		233	
Number of temp. control zones		8+1		8+1		8+1		8+1		8+1		8+1	
Clamping force	kN	28000				33000				40000		55000	
Opening stroke	mm	2100				2200				2250		2350	
Space between tie bar	mmxmm	2020x1620				2160x1710				2420x1920		2400x2200	
Min. Mould height (T-slot)	mm	800				900				1000		1000	
Max. Mould height (T-slot)	mm	1900				2000				2200		2200	
Max. Platen distance (T-slot)	mm	4000				4200				4450		4550	
Ejector stroke	mm	500				550				600		600	
Ejector force forward	kN	465				618				618		618	
Ejector force back	kN	365				483				483		483	
Number of ejector bar	PC	33				33				25		25	
Oil tank capacity	L	1950		2500		2500		3000		3000		3000	
Machine dimensions(L×W×H)	mXmXm	19.1x4.5x4.9		20.1x4.5x5		20.4x 5x5.1		21.2x5x5.1		22.5x5.3x5.1		23x5.3x5.1	

Note 1: Energy consumption grade according to GB/T30200-2013 standard, according to PP material test.
Note 2: Theoretical plasticizing capacity is calculated theoretically.

Due to the continuous product improvement, we reserve the right to adjust the individual parameters, without notice.

Platen Dimensions & Machine Dimensions

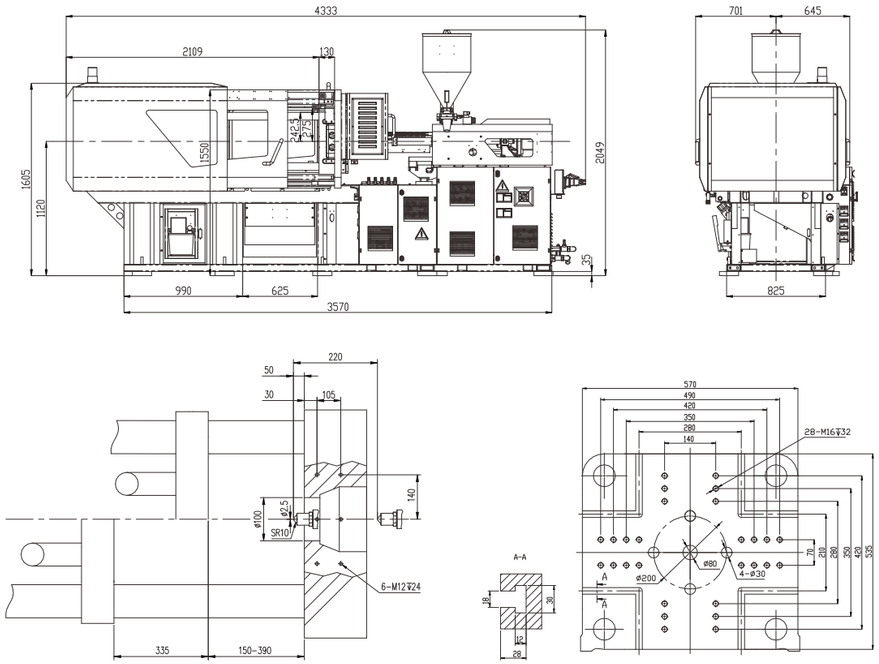

BL100EKW

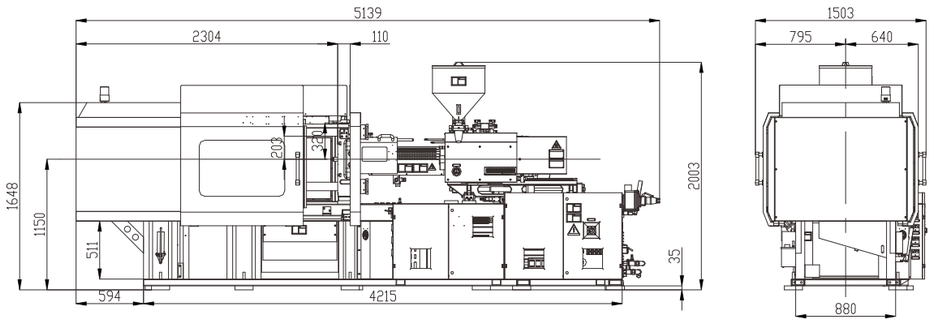

BL160EKW

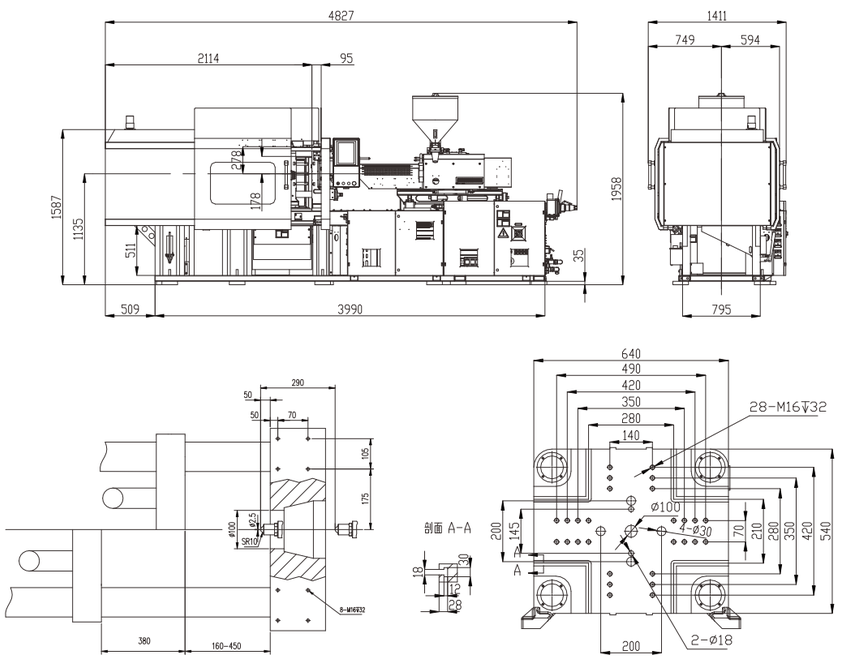

BL120EKW

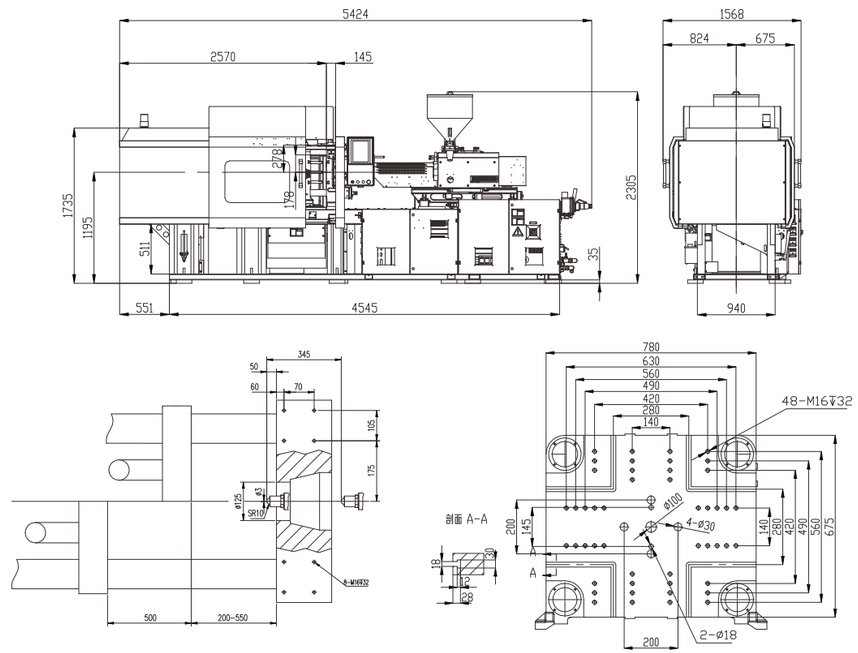

BL200EKW

Platen Dimensions & Machine Dimensions

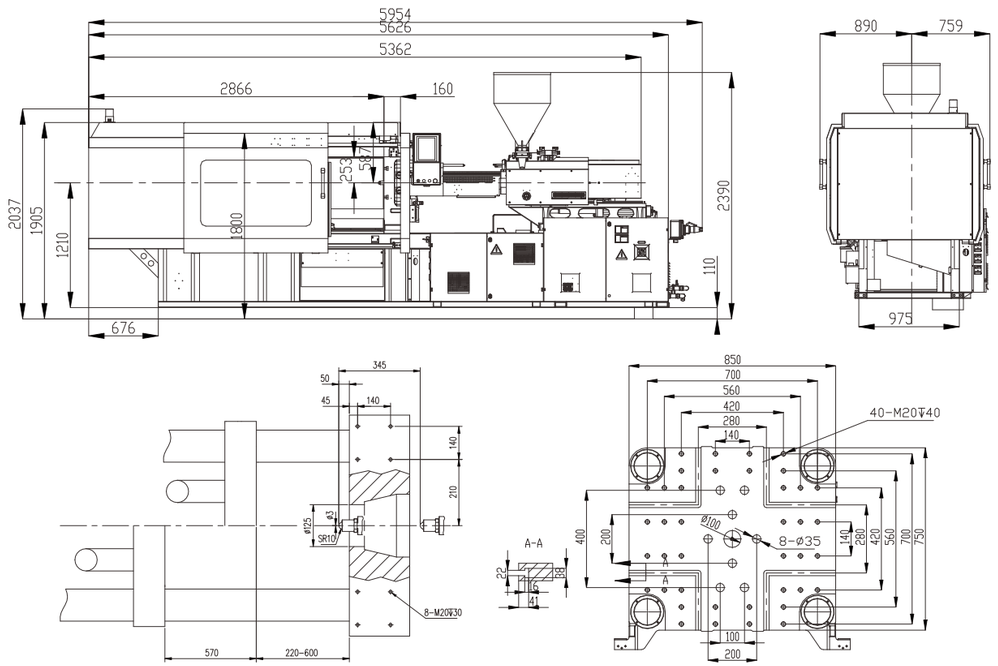

BL250EKW

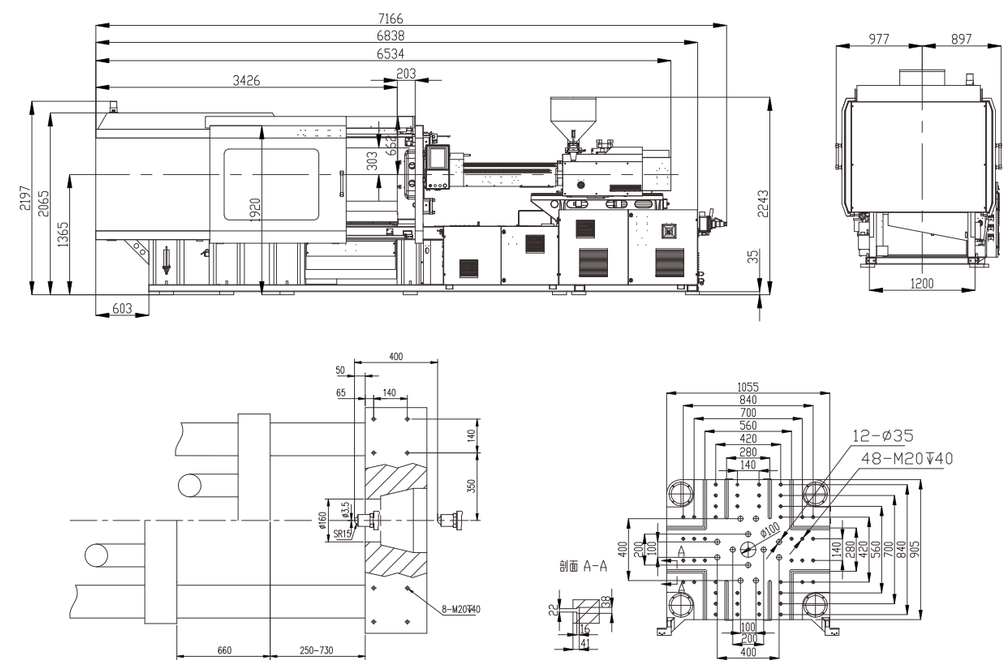

BL360EKW

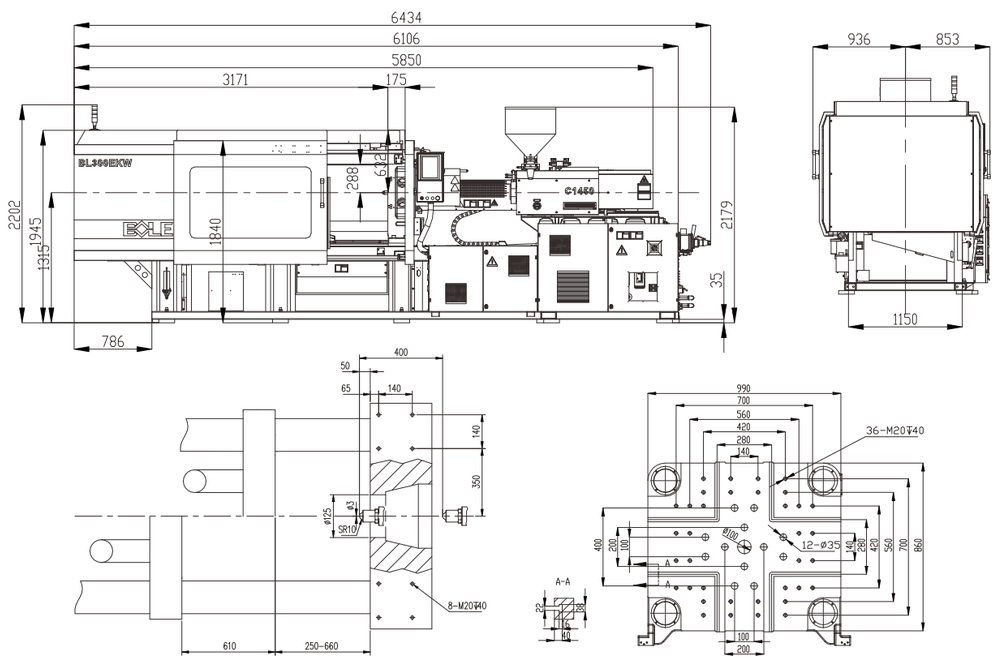

BL300EKW

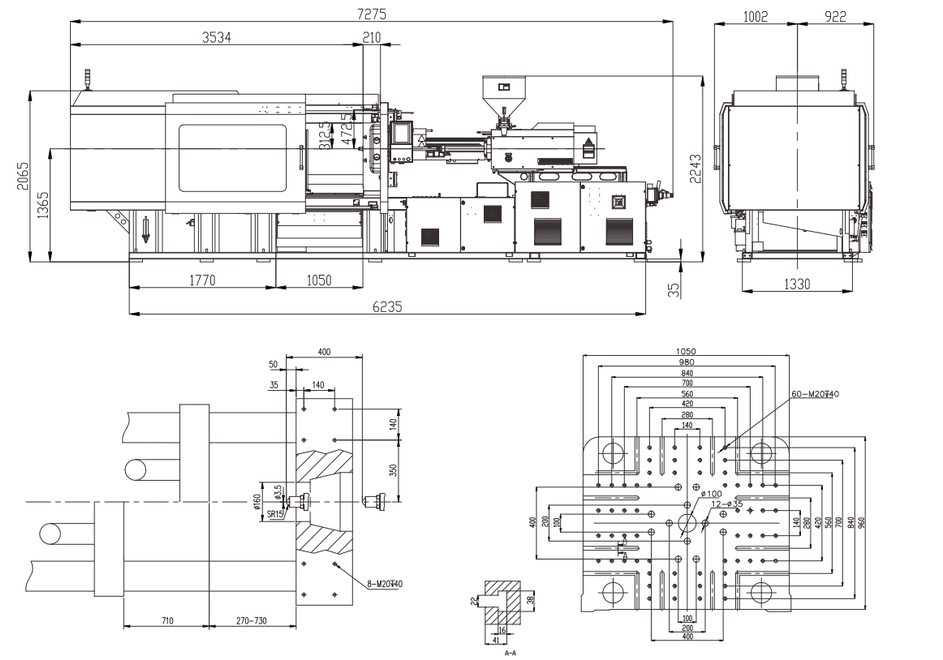

BL400EKW

Platen Dimensions & Machine Dimensions

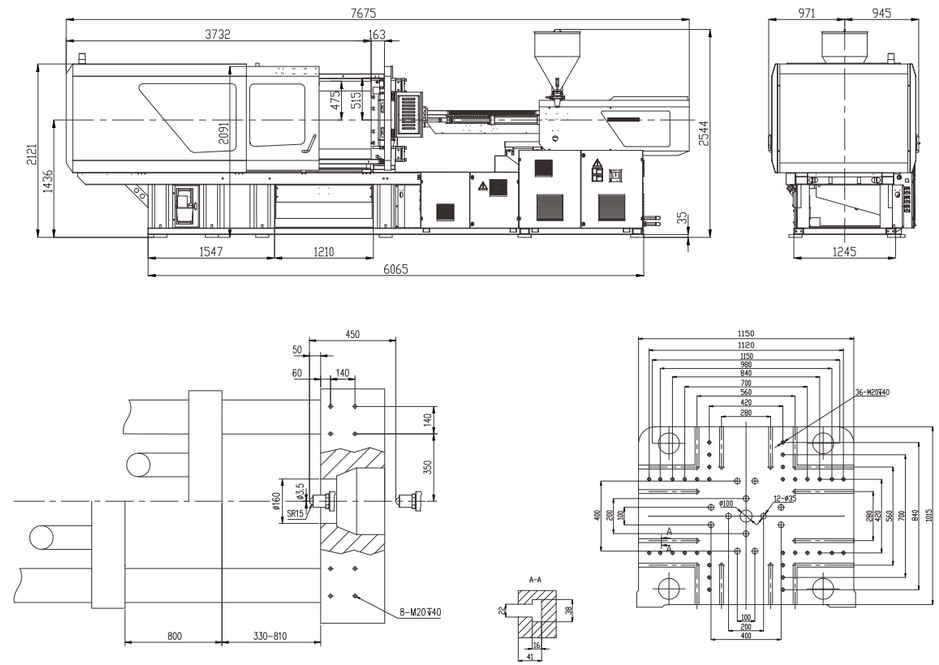

BL470EKW

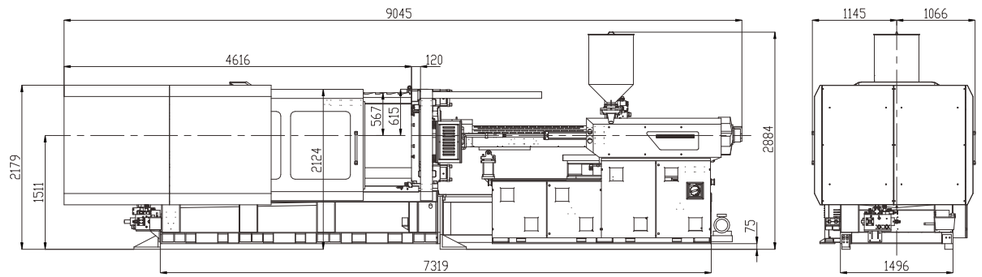

BL600EKW

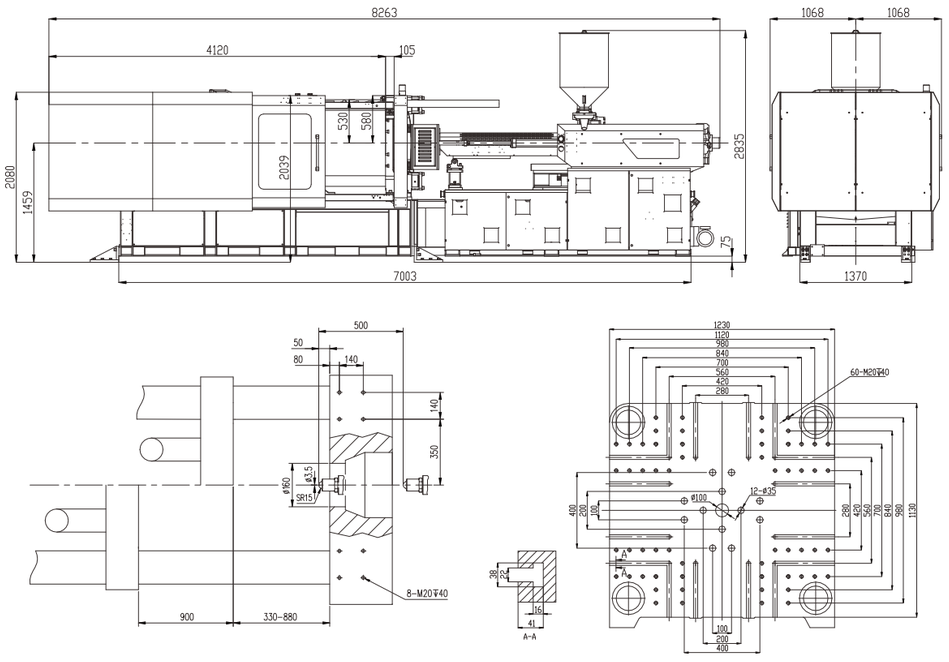

BL530EKW

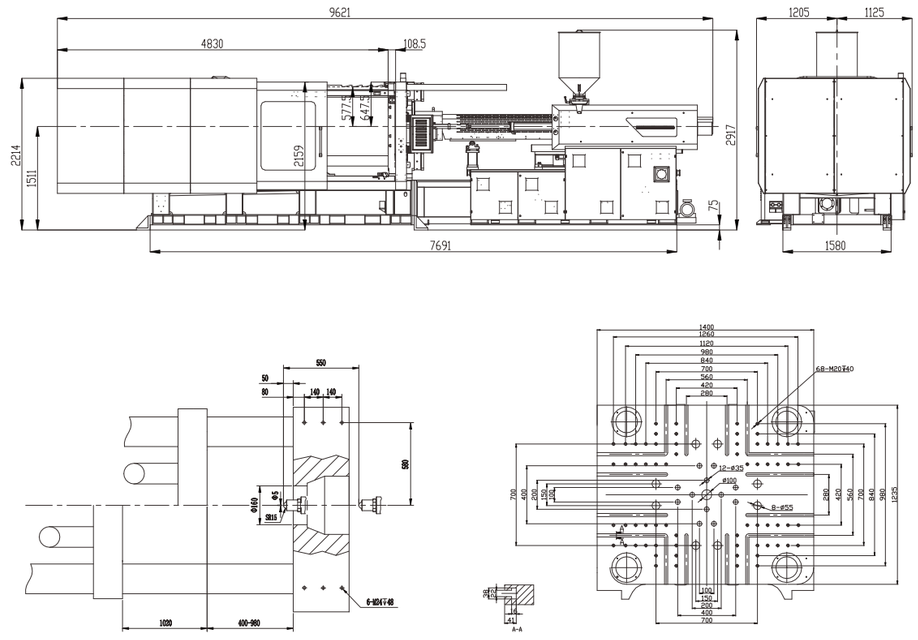

BL700EKW

Platen Dimensions & Machine Dimensions

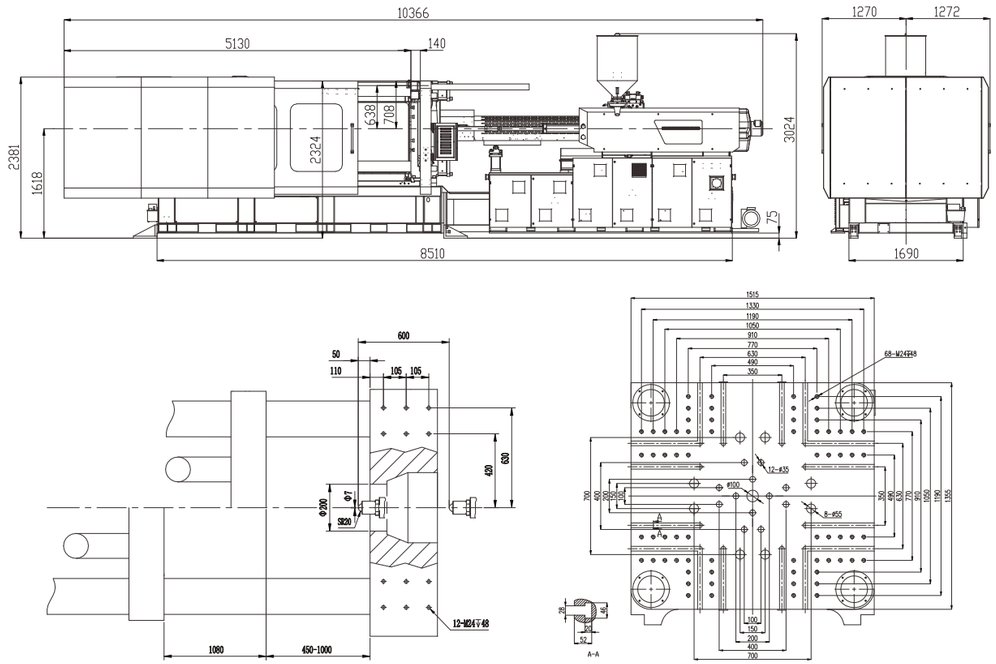

BL800EKW

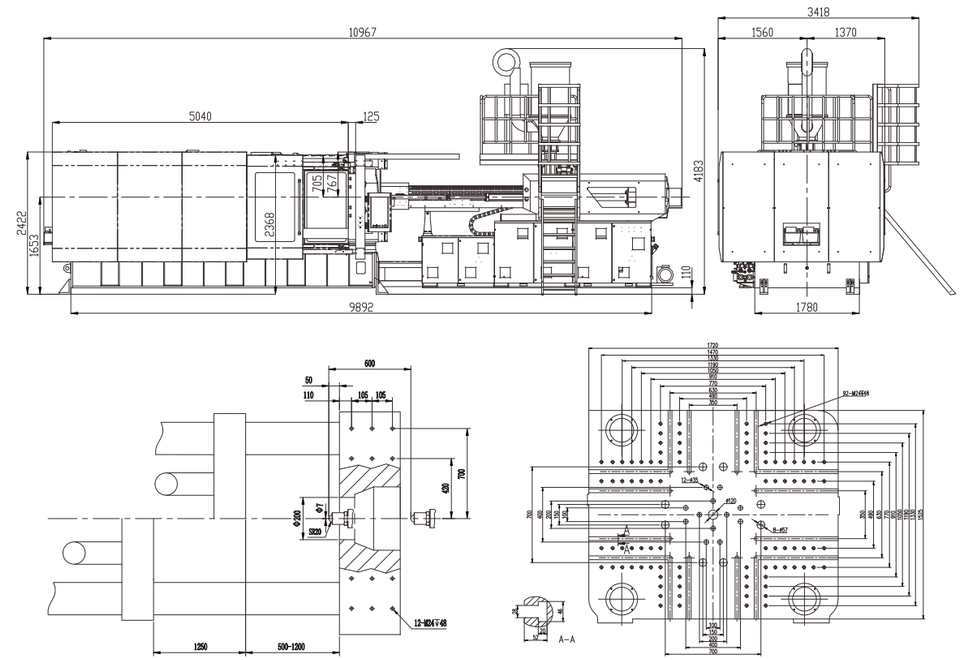

BL1000EKW

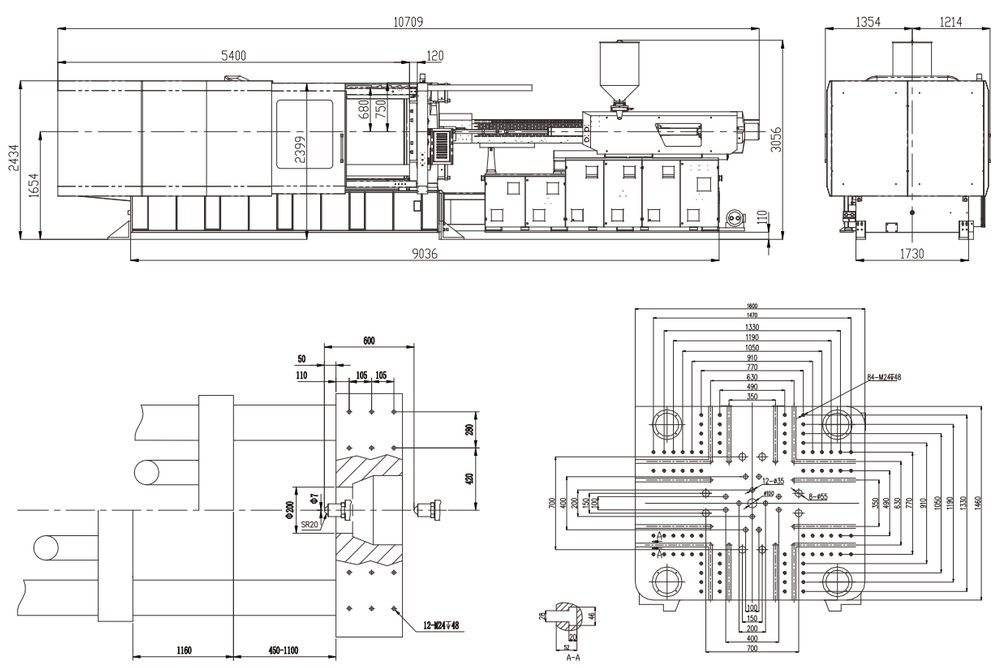

BL900EKW

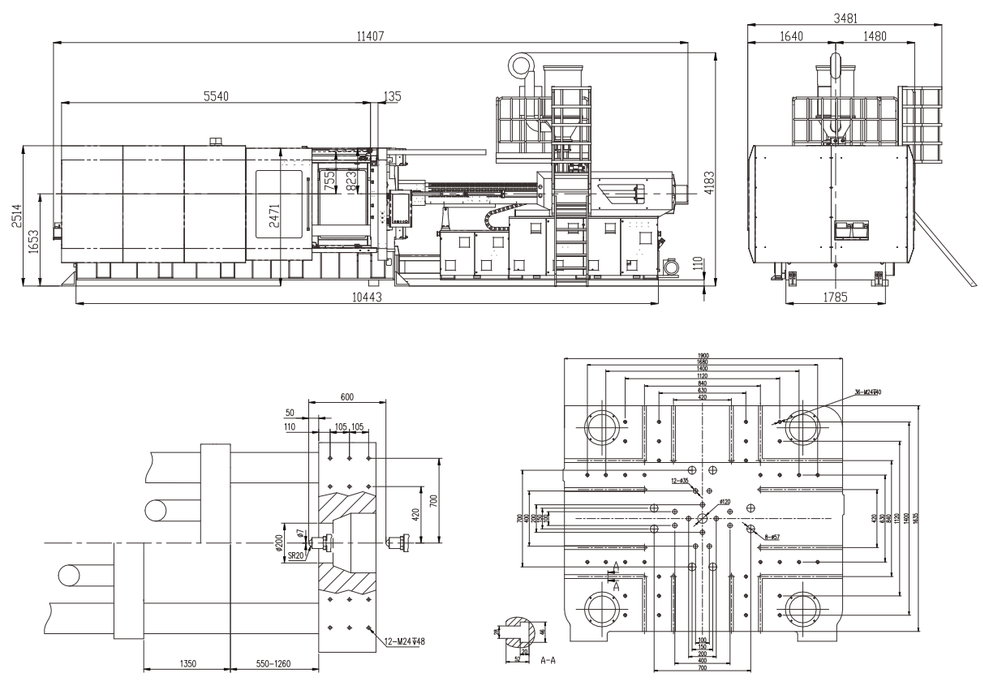

BL1200EKW

Platen Dimensions & Machine Dimensions

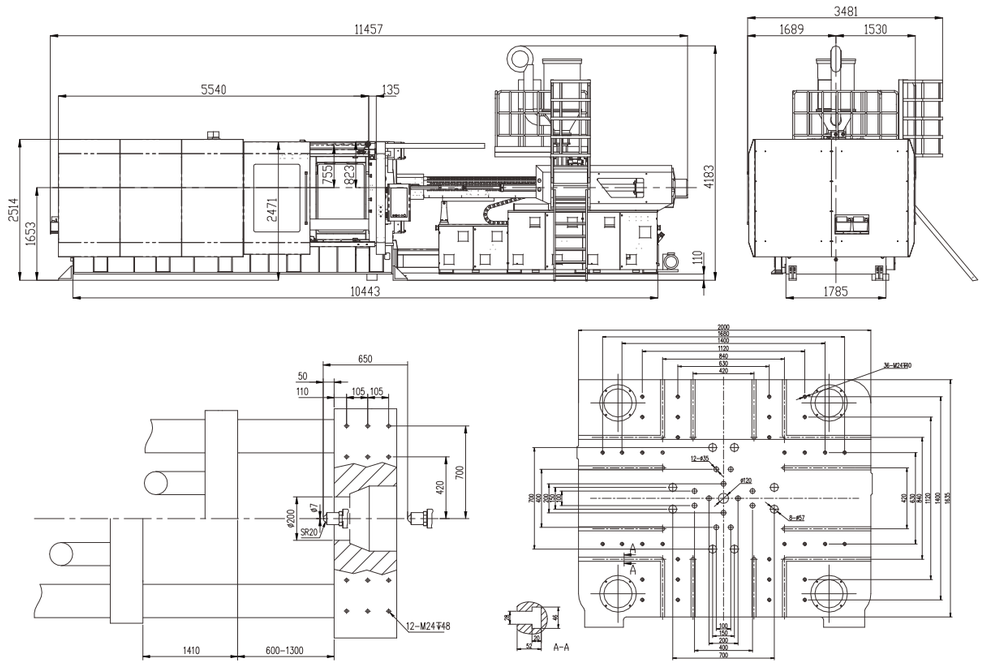

BL1300EKW

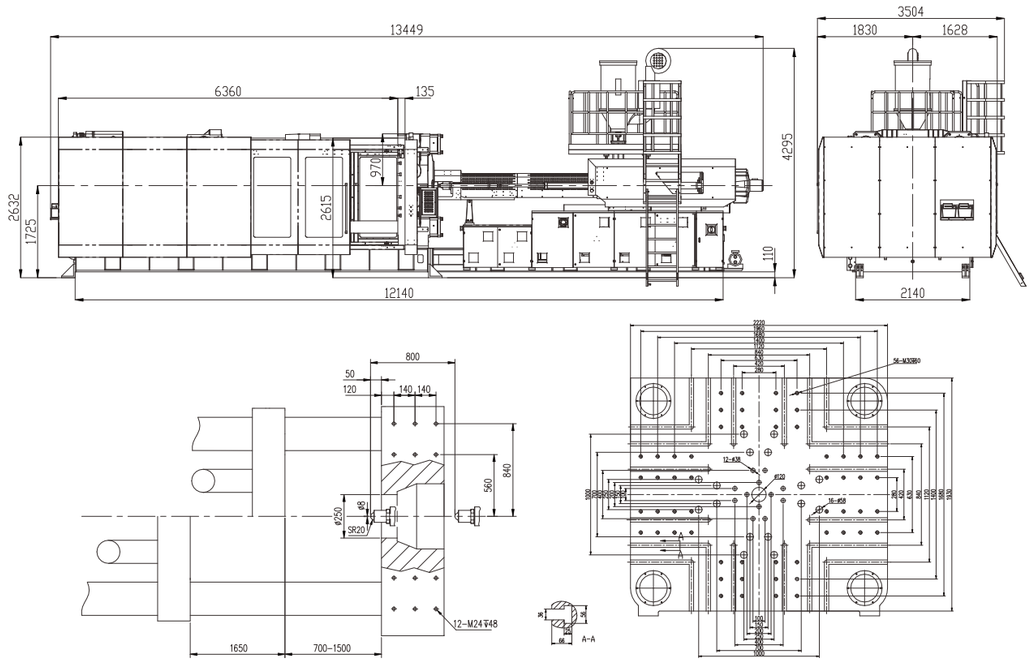

BL1600EKW

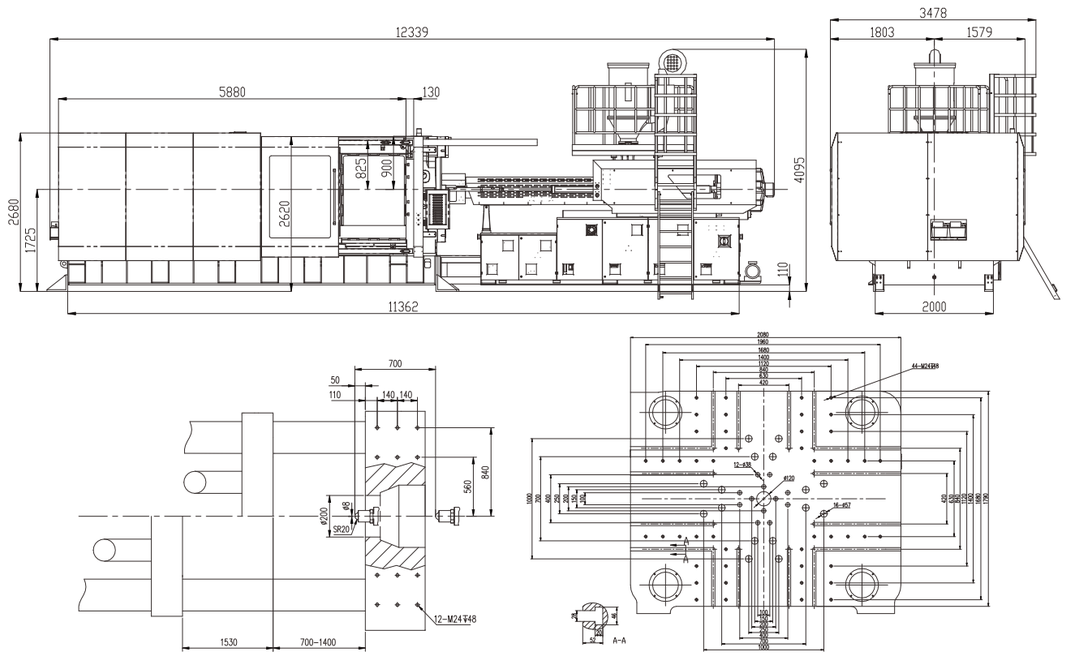

BL1400EKW

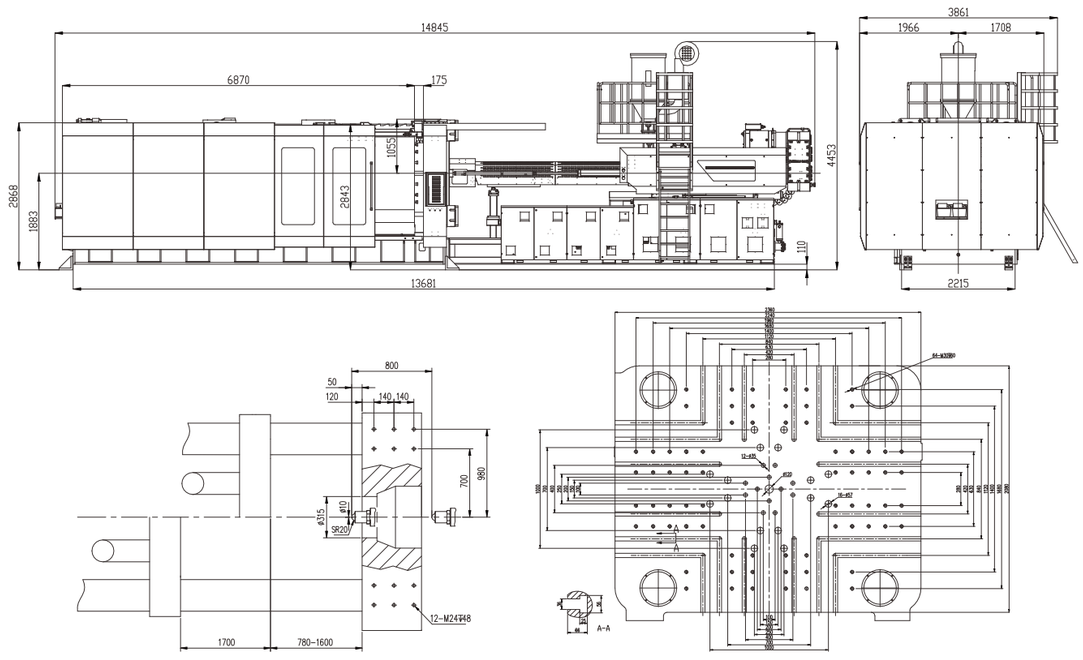

BL1850EKW

Platen Dimensions & Machine Dimensions

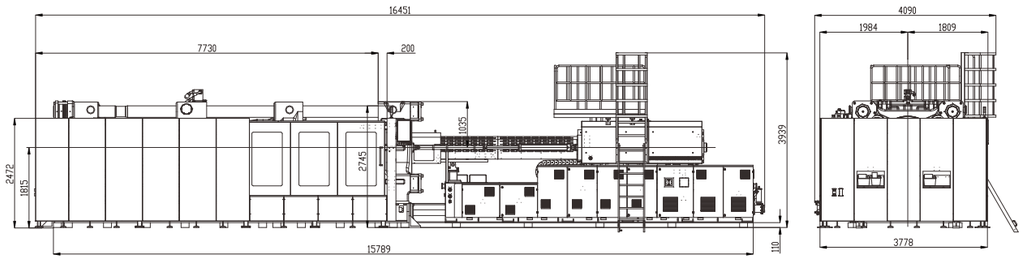

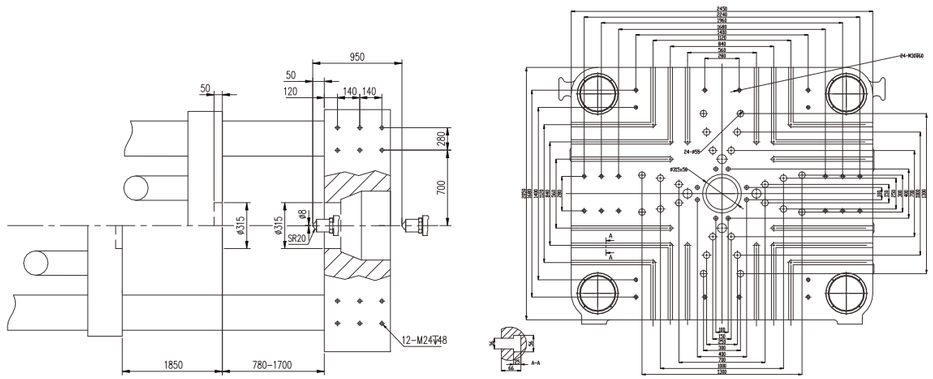

BL2100EKW

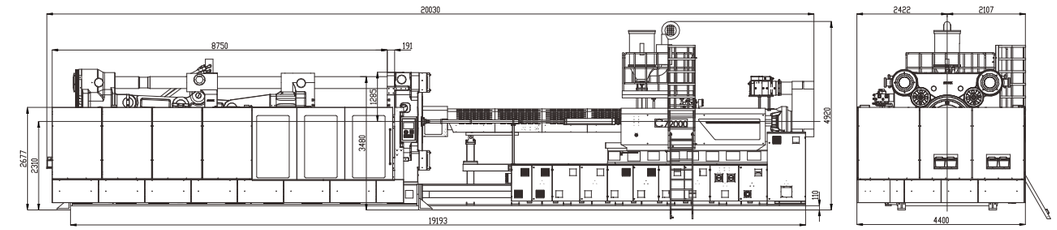

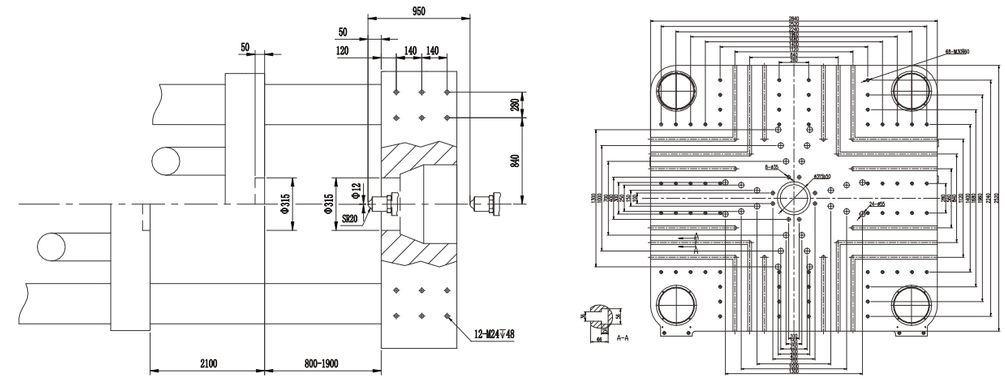

BL2800EKW

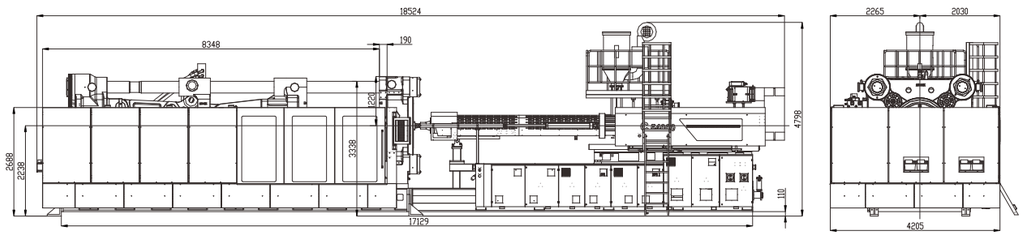

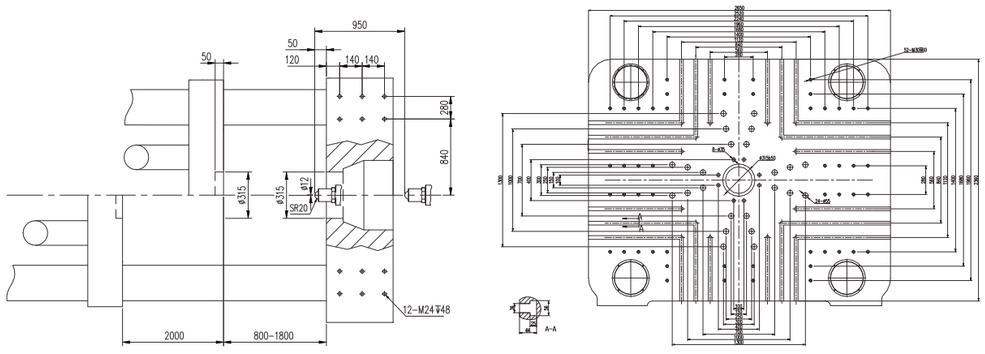

BL2500EKW

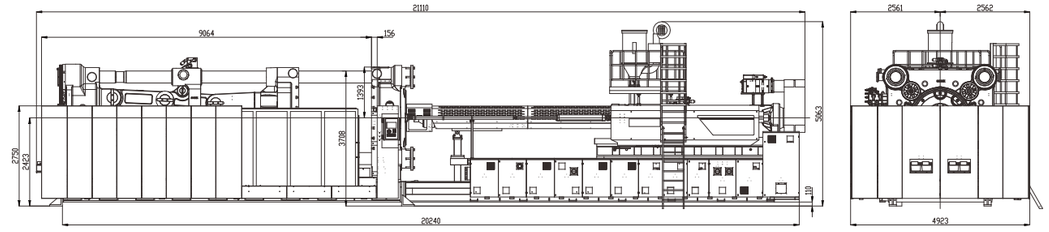

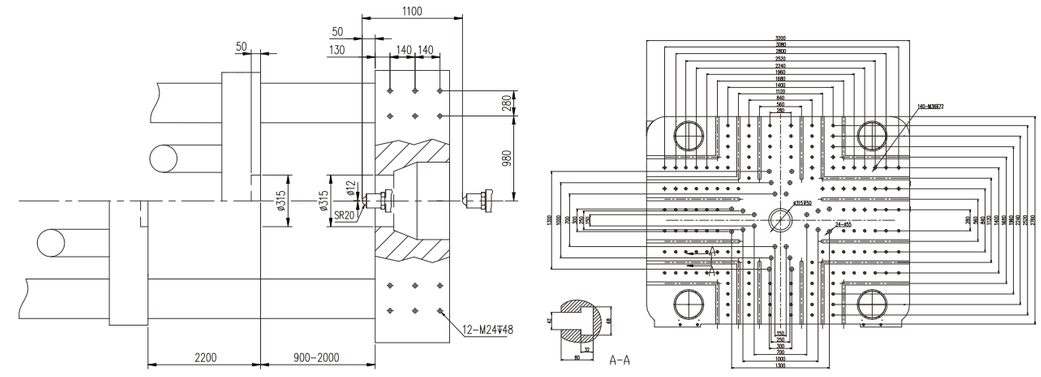

BL3300EKW

Platen Dimensions & Machine Dimensions

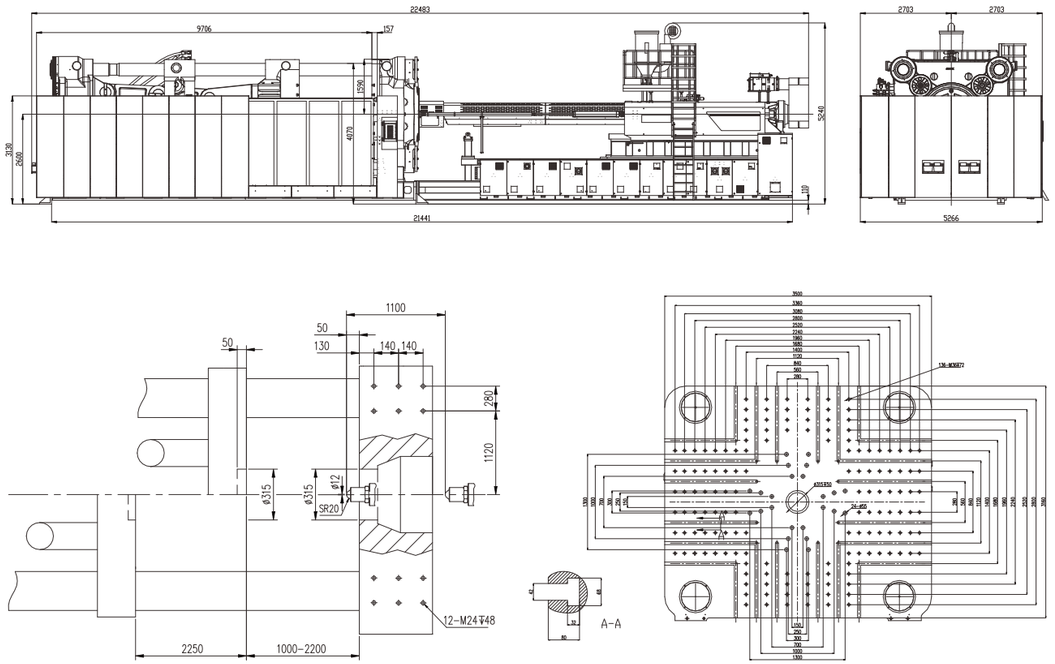

BL4000EKW

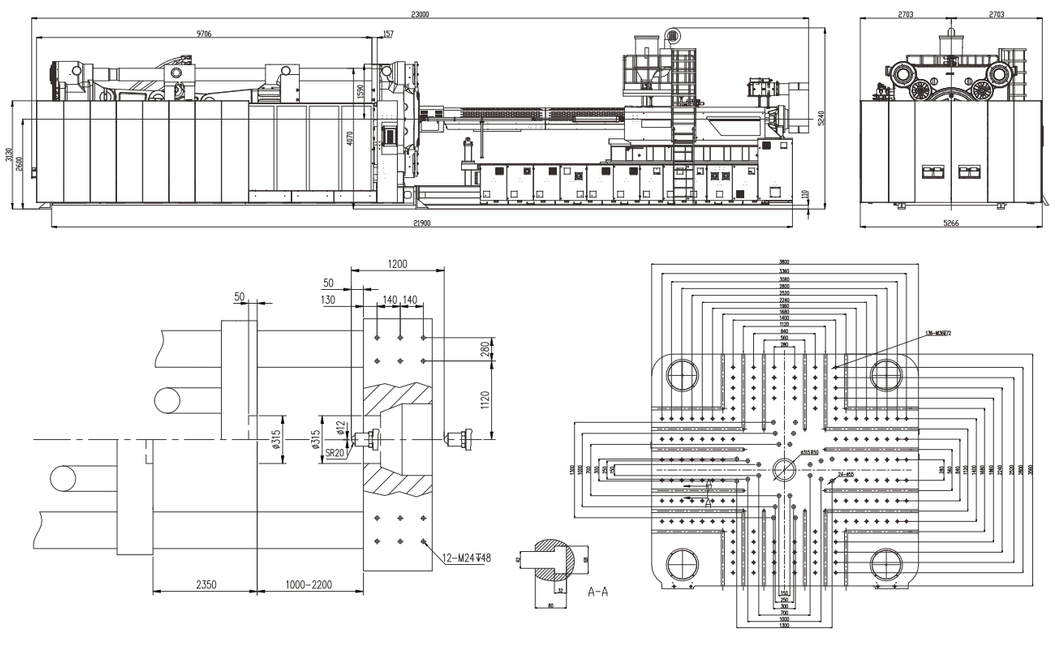

BL5500EKW

Configuration List

Standard Configuration And Function List for BL-EKW Series

Clamping Unit

- Patented five-point clamping mechanism with outward crankshaft get great opening stroke
- Widen platen design adapt to large-dimension mold
- High-precision and low-pressure protection mold function
- Hydraulic motor drives automatic gear for mold adjustment
- Adjustable support structure for moving platen reduces deformation of tie bar
- Mechanical, electrical, hydraulic two/three level safety protection device
- Equipped with mold safety pedal in the mold area (above BL1200EKW)
- Automatic safety door control (above BL700EKW)
- Mold opening and closing, ejecting movement are controlled by high-precision electronic ruler
- Various ejecting modes are optional, pressure and speed are set separately
- Synchronous ejection/core pulling function on machines BL2100EKW-5500EKW
- Five levels speed and the adjustable pressure for mold opening and closing
- Volumetric centralized lubrication system with automatic detection

Electrical Control Unit

- Process parameter presetting function
- With setting value reference and online operation auxiliary description function
- Optional robot interface
- Parameter data protection lock
- PID temperature automatic control, realize self-calibration of barrel temperature
- USB interface, convenient for panel program update and mold parameters backup
- With the memory function of machine stopping, it can store 200 groups of mold data randomly
- 100 sets of exception alerts and 100 sets of modification record stores
- Multi-level password protection, and new setting according to different authorization levels, to prevent the wrong modification of molding parameters
- Input point and output point detection and I/O online simulation function, to quickly confirm the machine running status
- Multiple standby sockets (5-pin 32AX1 + 5-pin 16AX1 + 3-pin multi-function X1)
- Standard with the hopper and product-out detection for 100EKW-400EKW
- Emergency stop protection for front doors and back doors for all series, mold area emergency stop protection for 1200EKW-5500EKW
- Alarm light with audible prompt
- Electronic ruler control for the carriage movement

Others

- Bole standard color
- Adjustable shock absorbers for the machine base
- Accessory box
- Common tools
- Damageable spare parts

Hydraulic Unit

- Servo energy saving system
- Oil temperature detection, and oil temperature deviation automatic alarm
- Motor overload protection function
- with self-sealing oil absorption filter for above 470EKW
- Core pulling device
  100-700EKW: Standard 1 set reserved 1 set (on movable platen)
  800-1850EKW: Standard 2 sets (on stationary platen) and 1 set reserved (on movable platen)
  2100-5500EKW: Standard 2 sets (1 set on stationary platen and 1 set on movable platen) and 2 sets reserved (1 set on stationary platen and 1 set on movable platen)
- Quick plug for mold cooling water (□10)
  100-250EKW: Standard with 1 set, 5in/5out
  300-470EKW: Standard with 1 set, 7in/7out
  530-900EKW: Standard with 1 set, 9in/9out
  1000-5500EKW: Standard with 2 set, 9in/9out+8in/8out

Injection Unit

- High-efficiency plasticizing screw and barrel with high-quality nitrided steel
- Screw anti-cold-start delay setting, timing heating and automatic heat preservation function
- High-quality and large-torque hydraulic motor
- Leakproof function when the screw is backward
- Twin carriage cylinder design
- High rigidity support structure for injection unit
- Trimming function of nozzle centralization
- High-precision electronic ruler to control the injection stroke
- Six-section injection, five-section pressure hold, five-section material charging, pressure/speed adjustable
- Screw speed detection
- Automatic material cleaning function
- Proportioned back pressure for plasticizing
- Centralized lubrication for 1000EKW and above
- Feeding platform for 1000EKW and above
- Additional extension nozzle (100EKW-700EKW extend 50mm, 800EKW-5500EKW extend 100mm)
- Linear guide rail support structure for Injection seat and plasticizing seat

Due to the continuous product improvement, we reserve the right to adjust the individual parameters, without notice.

APPLICATION AREA

Automobile industry

Household electrical appliance industry

Medical products

Logistics building materials

3C Electronics

Preform product