FE Series

The Passionate Pursuit of Perfection

en.bole-machinery.com

BOLE Customer Service Center

BOLE MACHINERY

ADD: No.99 Weisan Road, Xiaogang, Ningbo, China

P.C: 315821

TEL: +86-574-86188007

FAX: +86-574-86188008

E-mail: bole-sales@bole-machinery.com

THIS CATALOGUE ARE PROTECT BY LAW OF COPY RIGHT.
ANY USE WITHOUT THE EXPRESS PERMISSION OF THE LAW OF COPY RIGHT,
MUST GET APPROVAL OF BOLE IN ADVANCE.

THIS VERSION WAS PRINTED IN FEB. 2023,
ANY DIFFERENCE SPECIFICATION FROM OLD VERSION SHOULD BE SUBLECT TO THIS VERSION.

FE Series

Electrical Injection Moulding Machine

Injection Moulding Machine

Advantage Of Full Electrical Injection Moulding Machine

Compared to the traditional hydraulic injection moulding machine

Energy Saving

Efficient energy conversion, Reduce power consumption. No need water for hydraulic oil cooling.

Efficient

Synchronous machine movement is possible to achieve a short cycle time

Precise

Up to 0.01mm high position control accuracy, ensure product quality

Clean

No pressure hydraulic oil, keep a clean production environment

High Speed

High-speed & smart movement control for mold and injection, fulfill different application

Quiet

Low noise level, create comfortable environment

BOLE Electrical Injection Moulding Machine

Precise High-speed Common Reliable

Fast & close loop control system excellent repeatability performance

Patented central clamping toggle system create uniform clamping force. reduces platen deflection

Platen drive by servo motor and ball screw.

No-touch Tie bar structure, constant accuracy

German design of plasticizing system increase efficiency of plasticizing over 20%

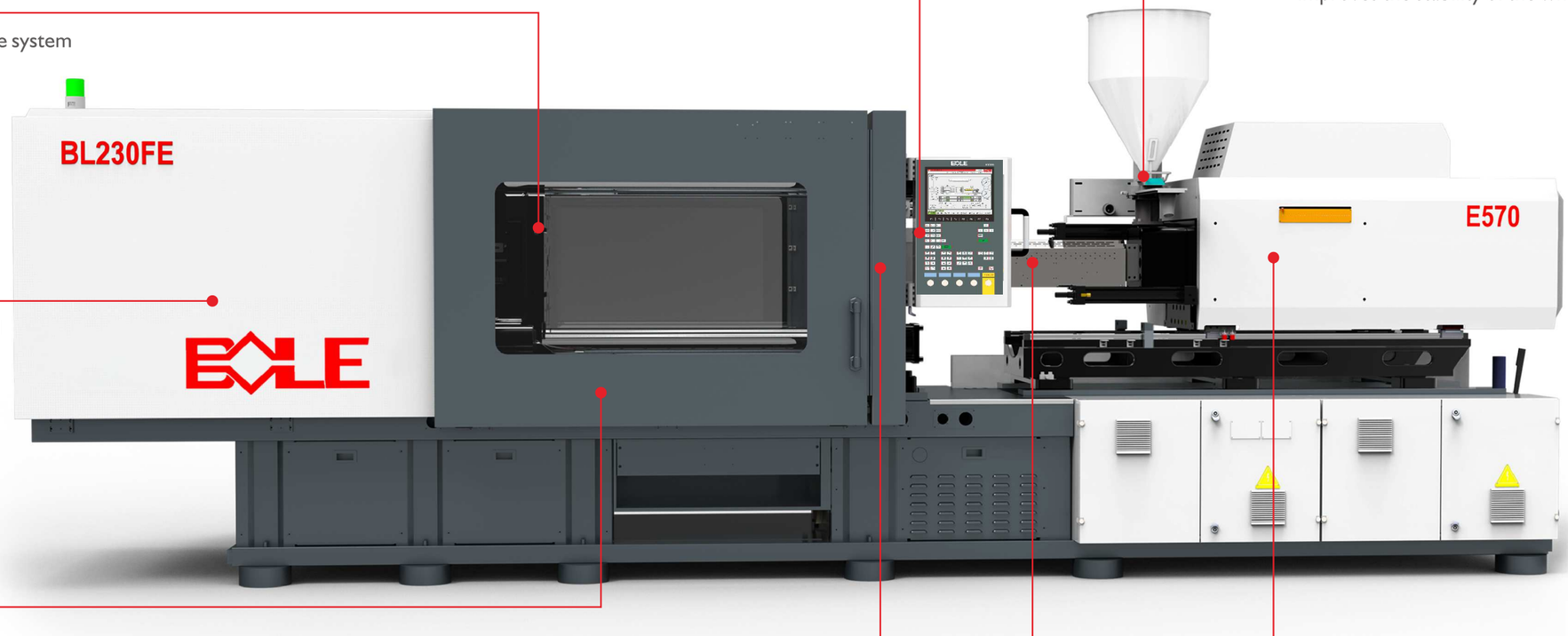

Nozzle contact force protecting mould avoiding leakage

The stable temperature of the feeding throat prevents the instability of the feed due to the change of the temperature, affects the screw plasticization and injection accuracy, and improves the stability of the whole machine.

Patented encapsulated ball screw

E-version Of Central Clamping Toggle System

Central clamping toggle, inventional patent in China
(Patent No.: ZL2011 10250342.5)

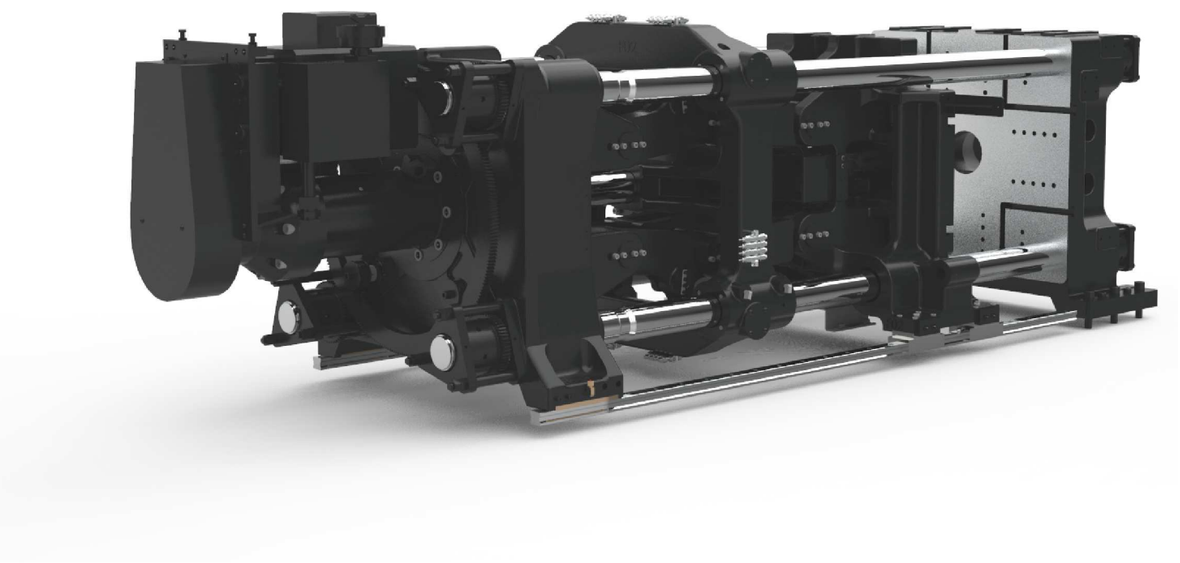

- **Saving**
  - Save material
  - Save electricity
  - Save nr. Of machine
  - Save maintenance
- **Precise**
  - Precise position
  - Precise speed
  - Reliable mold protection
  - Precise parallelism
- **Large**
  - Large space between tie-bars
  - Large open stroke
- **Clean**
  - The product area is free of oil

Toggle System Comparison

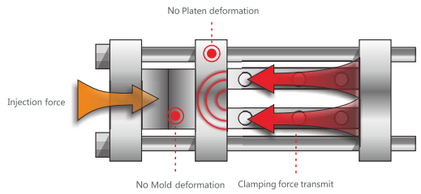

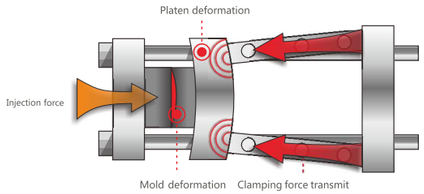

BOLE

BOLE centre clamping structure

- **100%**
  Clamping force efficiency
- **2-5%**
  Material saving
- Reduces mold wear, platen deflection
- Less possibility of flash, save flash trim work

Others

Tradition Toggle system

- **80-85%**
  Clamping force efficiency
- Moving platen with obvious deformation, cause flashes, waste of material and labor of trim the flashes.

Central Clamping Toggle System Driven By Servo Motor & Ball Screw

- Precise control for mold movement, repeatability up to 0.01mm, fit for IML or automation.
- Flexible control curve, fast and smooth mold movement
- Sensitive mold pretention function
- Tie bar no touch with moving platen, no lubrication, ensure the mold area clean.

Platen Supported By Linear Guide

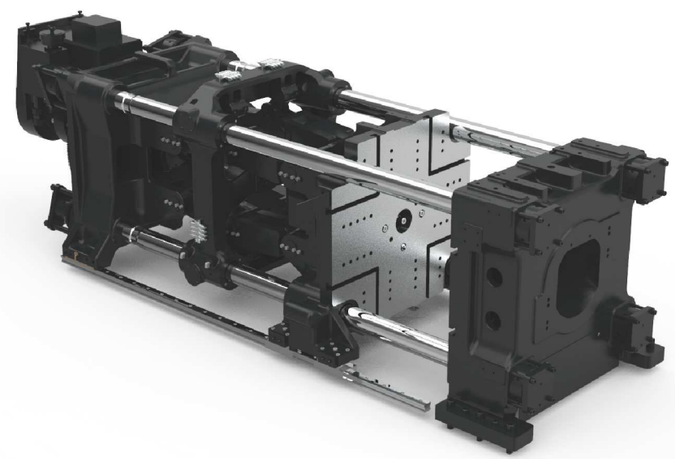

- High platen parallelism
- No lubrication on movable platen
- Keep clean around Part-drop-area

Patented Encapsulated Ball Screw Structure

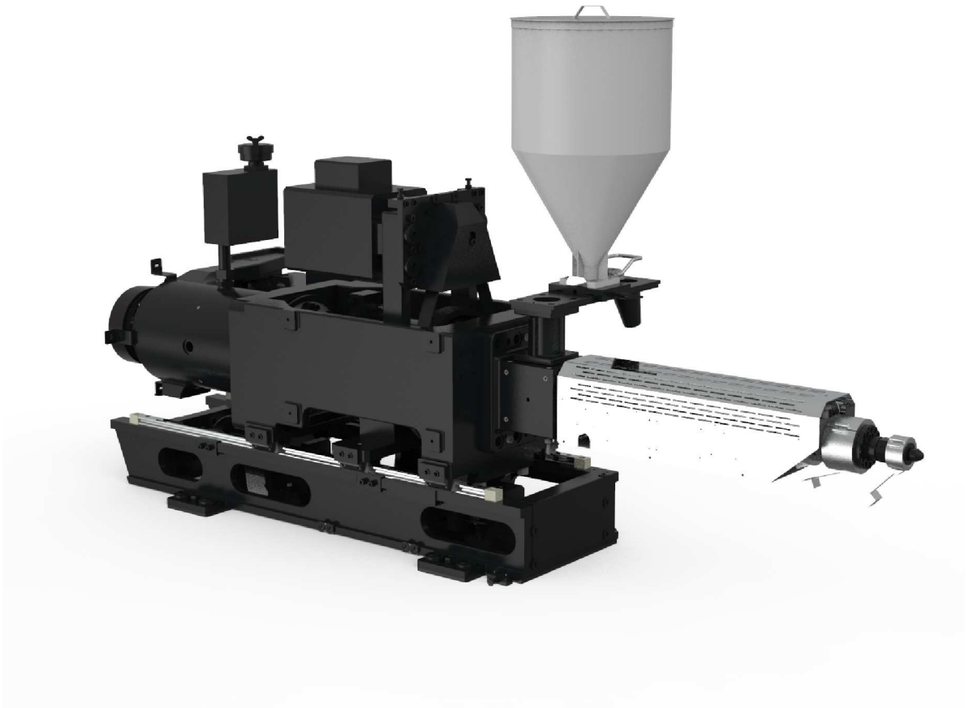

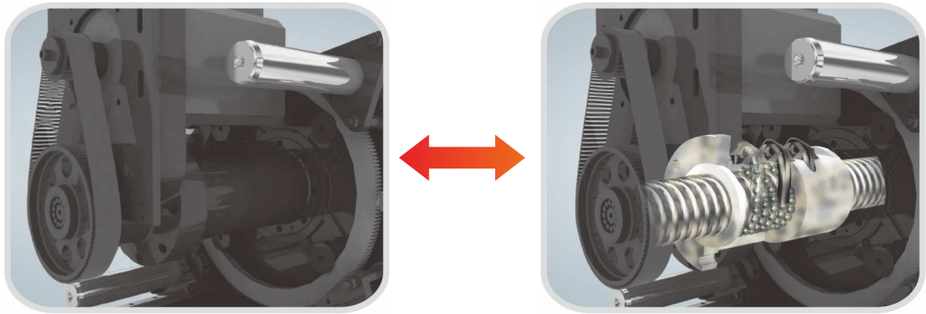

Tradition

Traditional design of ball screw structure is open to the air, dust will stick on the ball screw surface

Friction will increase ball screw temperature

Lubrication condition become worse

Breakthrough

Encapsulated ballscrew, reduce the requirement of workshop environment

The heat created by friction is taken by oil bath, Ballscrew is well kept cool.

Lubrication is kept on the friction surface by oil bath

- Take away friction heat rapidly, reduce ball screw temperature and abrasion.
- Obstuct dust pollution,request of using environment is low.
- Expensive and imported ball screw lubrication grease is unnecessary.
- More easy for maintenance,no need to clean fatlute.
- Special design of enclosed electric clamping cylinder which is anti-dust immersion type good lubrication. It will improve the ball screw lifetime.

Control System

EST

15
Inches

I/O
Module

PC
Port

4.0
Germany

CAT
Ether

0.01
Precision

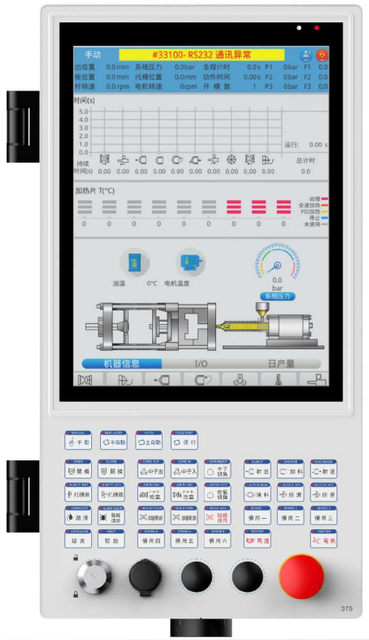

- Idream Series Control systerm,with 15inch full touchscreen, exquisite in design, super performance and easy for operation.
- Rich extension resource, and easy extension mode for all kind of customized requirments.
- EtherCAT fiedbus control system, utilize the running data ontime sharing among controller, servo driver and servo motor.
- Conbined with specific dynamic progarmming and high-response and high-overload motor to improve the product quality.

KEBA

12/15
Inches

I/O
Module

PC
Port

4.0
Germany

CAT
Ether

0.01
Precision

- KEBA controller as standard with 12 inch touchscreen, user friendly interface
- PC-based control platform, windows system, easy operation, easy to be extended.
- EtherCAT fiedbus control system, utilize superspdde I/O module with real time function.
- Germany industry 4.0 standard, intelligent manufacturing technology which is easy to implement.

Embedded Servo Hydraulic Pump System
(FE hydraulic-Electrical series)

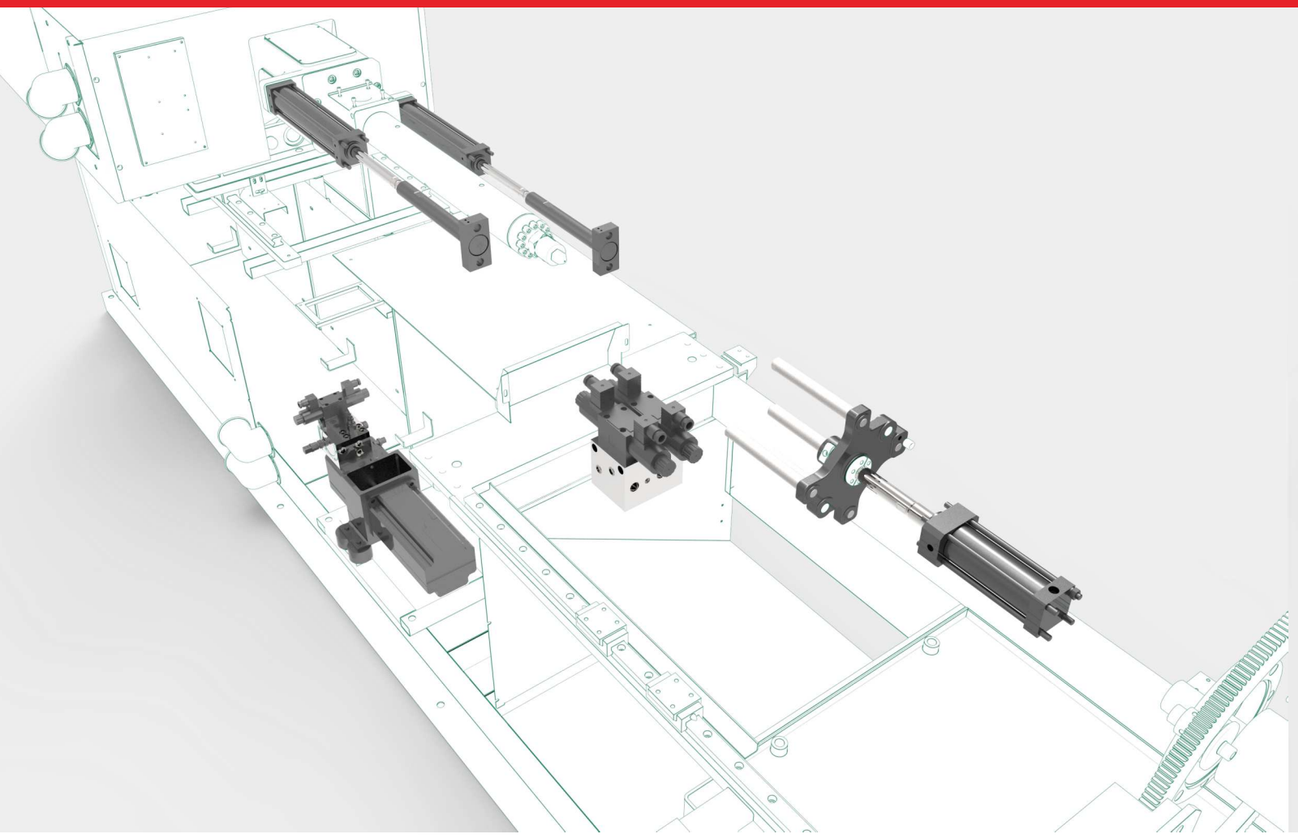

- Symmetrical cylinder arrangement for injection carrier, offer reliable and balance nozzle contact
- Servo drive hydraulic pump station, power saving and effetely
- Hydraulic ejector and core puller flexiable to meet different mold requirement

Standard FE series Configuration
(FE-A series)

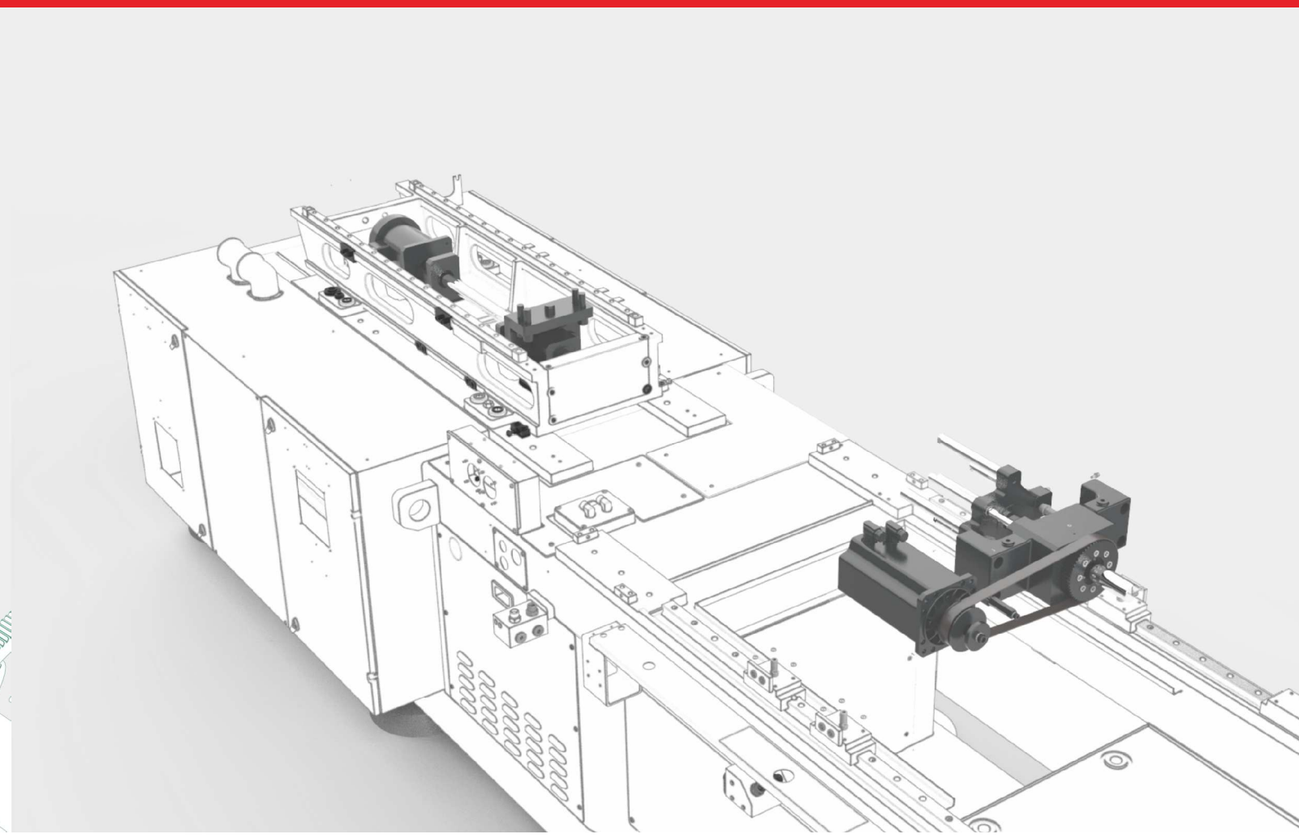

- Option for Full-electrical version: without hydraulic pump station and corepull, electrical drive for carrier movement and ejector.

German Designed Plasticizing System

- Excellent plasticizing efficiency
- Options for different application

Various Application

- Adopt low inertia&high response structure for injection, quiet conveyor, meet various condition
- Higher injection precision repeatability, stabilize in product
- Meet various condition, thin wall packing and wall thick lens can be applied
- Injection position repeatability+/-0.01mm

Technical Data

		BL50FE-A			BL110FE/BL110FE-A				BL150FE/BL150FE-A				BL180FE/BL180FE-A				BL230FE/BL230FE-A				BL280FE/BL280FE-A				BL350FE/BL350FE-A				BL450FE/BL450FE-A							
Screw Specification		A	B	C	AA	A	B	C	AA	A	B	C	AA	A	B	C	AA	A	B	C	AA	A	B	C	AA	A	B	C	A	B	C	D	A	B	C	D
Screw Diameter	mm	22	25	28	25	28	32	36	28	32	36	40	32	36	40	45	36	40	45	50	40	45	50	55	45	50	55	60	60	65	70	75	70	75	80	85
Screw L/D Ratio		23	23	23	23	23	23	23	23	23	23	23	23	23	23	23	23	23	23	23	23	23	23	23	23	23	23	23	23	23	23	23	23	23	23	21.3
Plasticizing ability	mm	9	12	18	9	12	18	24	11	15	21	25	15	21	25	40	18	24	34	45	24	34	45	59	34	45	59	74	49	62	76	91	76	91	110	126
Screw Stroke	g/s	100			140				160				180				200				230				260				325				370			
Injection Capacity	cm^3	38	49	62	69	86	113	143	99	129	163	201	145	183	226	286	204	251	318	393	289	366	452	546	414	511	618	735	919	1078	1251	1436	1424	1635	1860	2100
Shot Weight Ps	g	35	45	56	63	78	102	130	90	117	148	183	132	167	206	261	185	229	289	357	263	333	411	497	376	465	562	669	836	981	1138	1307	1296	1487	1692	1911
Nozzle contact pressure	kN	20			25				30				40				50				55				55				60				60			
standard injection unit		E100			E225				E325				E400				E570				E800				E1100				E2150				E3250			
Injection Speed	mm/s	200	200	200	200	200	200	200	200	200	200	200	200	200	200	200	190	190	190	190	190	190	190	190	165	165	165	165	165	165	165	165	165	165	165	165
Injection Pressure	MPa	284	220	175	328	261	200	158	331	253	200	162	313	247	200	158	313	253	200	162	313	247	200	165	269	218	180	151	235	200	172	150	230	200	176	156
Holding Pressure	MPa	232	180	143	262	209	160	126	264	203	160	130	250	198	160	126	250	203	160	130	250	198	160	132	239	194	160	134	188	160	138	120	184	160	141	125
high speed injection unit		E100H			E225H				E325H				E400H				E570H				E800H				E1100H				E2150H				E3250H			
Injection Speed	mm/s	330	330	330	330	330	330	330	330	330	330	330	330	330	330	330	250	250	250	250	250	250	250	250	250	250	250	250	250	250	250	250	250	250	250	250
Injection Pressure	MPa	284	220	175	328	261	200	158	331	253	200	162	313	247	200	158	313	253	200	162	313	247	200	165	269	218	180	151	234.7	200	172.4	150.2	230	200	176	156
Holding Pressure	MPa	232	180	143	262	209	160	126	264	203	160	130	250	198	160	126	250	203	160	130	250	198	160	132	239	194	160	134	187.8	160	138	120.2	184	160	141	125
Screw Speed	rpm	400			400				350				350				300				300				300				200				200			
Clamping Force	kN	500			1100				1500				1800				2300				2800				3500				4500							
Tie-bar Distance (h×v)	mm	360×330			460×410				510×460				560×510				660×610				710×660				810×760				910×860							
Opening Stroke Max	mm	300			400				450				500				600				650				750				820							
Min. Mold Height	mm	140			150				180				200				200				220				240				350							
Max. Mold Height	mm	390			450				500				550				650				700				800				830							
Max Daylight	mm	690			850				950				1050				1250				1350				1550				1650							
Ejector Stroke	mm	70			100				120				130				130				150				150				180							
Ejector Force	kN	20			30				35				45				45				50				60				98							
Number of ejector rods	PCS	5			5				5				5				13				13				13				17							
Dry cycle time	S	1.2			1.3				1.4				1.6				1.8				2.1				2.3				3							
Total electrical capacity(High speed)	KW	25.4(36.8)			52.6 (69.6)				59.6 (71.6)				60.5 (76.5)				70.2 (82.2)				110.3 (132.3)				156 (178)				220.9 (244.9)				233.1 (277.7)			
Heater power	KW	5.4	6.2	7.2	5.6	6.4	7.4	8.4	7	7.9	8.85	9.8	7.8	8.65	9.6	10.7	9.7	11.7	13.6	15.5	13.3	15	16.9	18.8	17.2	19.1	21.9	24.5	21.8	24	26.2	26.2	29	33	37	37
Number of temp. control zones		3+1			3+1				3+1				3+1				3+1				3+1				3+1				4+1				4+1			
Hopper capacity	L	25			25				25				25				25				50				50				50				50			
Min. platen size(L×W)	mm	250×250			320×320				360×360				390×390				460×460				500×500				570×570				640×640							
Platen size(L×W)	mm	530×500			660×610				730×680				820×770				940×890				1020×970				1130×1080				1270×1220							
Stationary platen load	kg	153			323				459				612				935				1173				1700				2170							
Moving platen load	kg	247			527				711				948				1455				1827				2640				3360							
Machine Weight	ton	3.5			4.2				5.7				6.9				8.5				11.5				15				20				21			

Due to the continuous product improvement, we reserve the right to adjust the individual parameters, without notice.

Due to the continuous product improvement, we reserve the right to adjust the individual parameters, without notice.

Platen Dimensions & Machine Dimensions

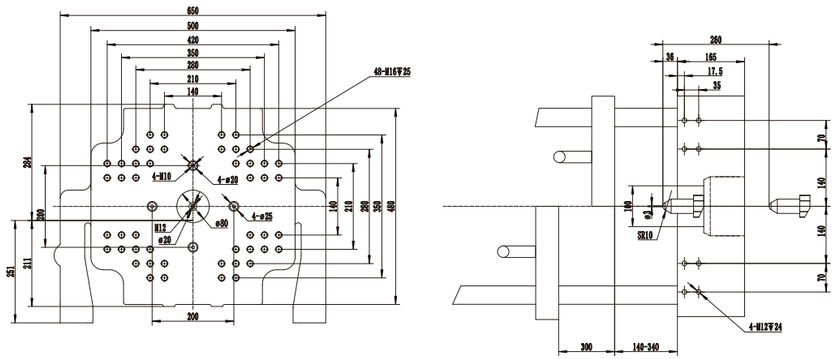

BL50FE

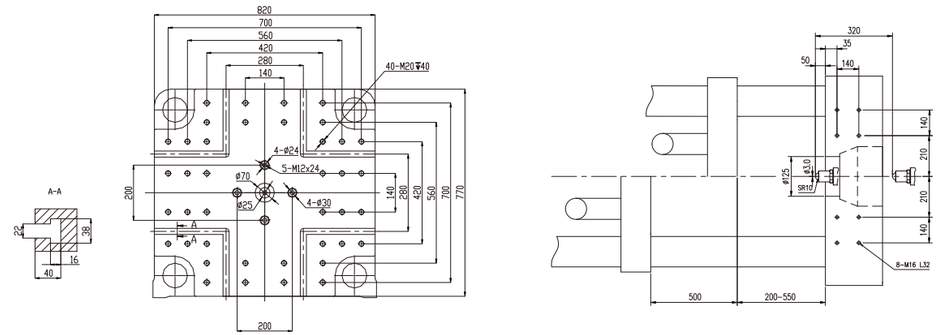

BL180FE

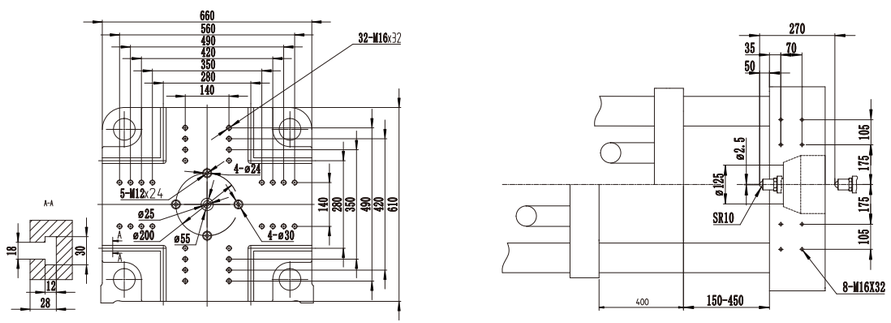

BL110FE

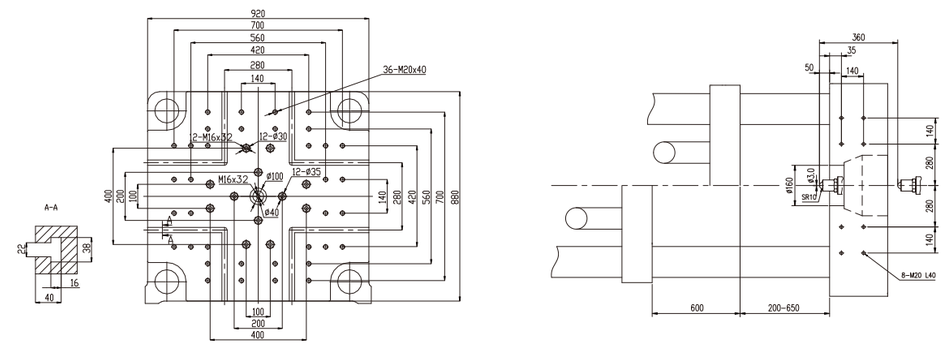

BL230FE

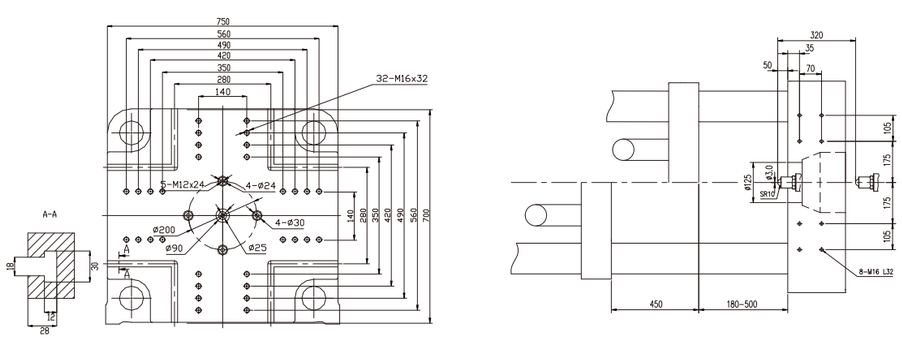

BL150FE

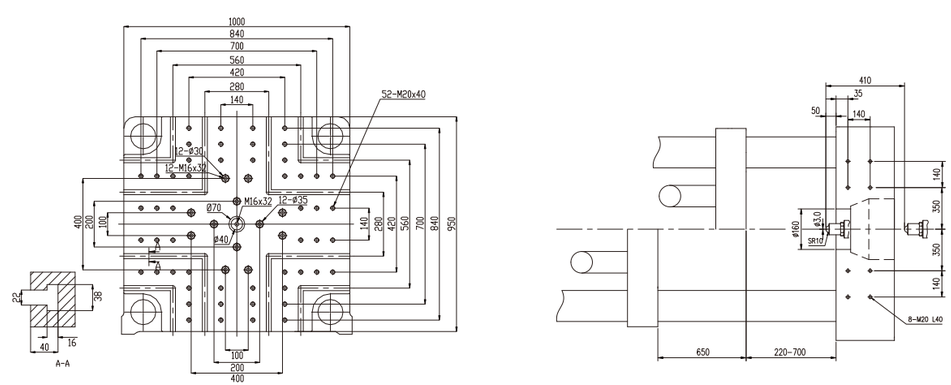

BL280FE

Platen Dimensions & Machine Dimensions

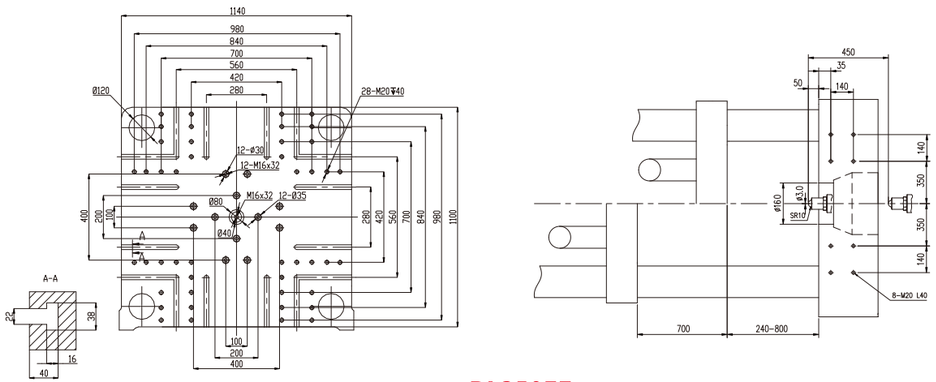

BL350FE

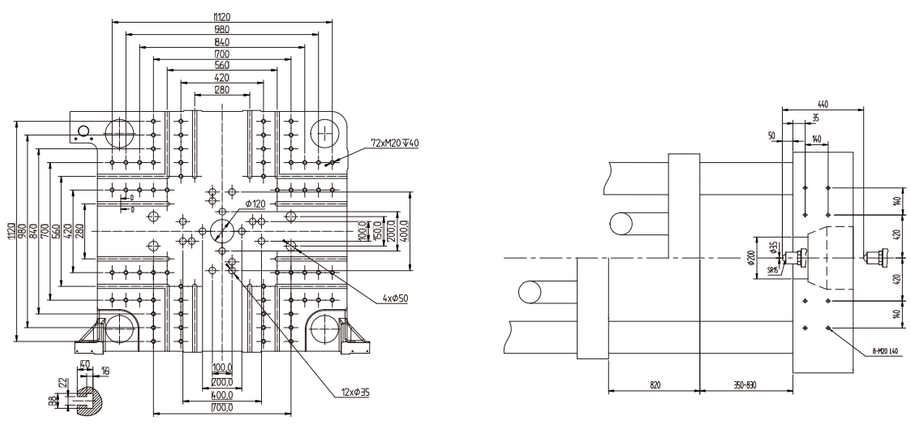

BL450FE

Configuration List

Standard Configuration Menu of BL50-450FE

Injection Unit

- Anti-resistant screw set (straight nozzle)
- Nozzle safety cover(with limit switch)
- Injection 5 stage control
- Holding 5 stage control
- Charge 3 stage control
- Back pressure 5 stage control
- Suck back optional
- Time delay for suck back
- Time delay before injection
- Time delay before charging
- Flow increase injection
- V/P switch(position,time,pressure,velocity)
- Injection speed response model selection
- Injection pressure multi control
- Holding speed control
- Auto purge function
- Charge speed control
- Anti-cold start screw
- Mold open while charge
- Close loop temp control for barrel(K&J type)
- Barrel keep warm
- Barrel temp optimization
- Barrel temp preheat
- Barrel temp synchronous warming
- Carriage move set(limit switch,moving time)
- Suck back mode(3 mode)
- High contact force nozzle device
- Nozzle centre adjustment equipment
- Hopper temp control close loop
- Injection base rotation
- Nozzle temp control

Clamp Unit

- Mold 5 stage control
- Low pressure protection
- Low pressure&velocity mold open
- Injection compress function
- High pressure release during cooling time function
- Injection during mold close
- Twice mold close function
- Mold inside cut function
- Safety device for clamping(mechanical&electrical)
- Adjustable support for moving platen
- Clamping force set
- Ejection device(compulsory rest optional)
- Ejection detail function
- Ejection 3 stage control
- Ejection time delay
- Ejection shake mode
- Variable ejection position mode
- Synchronized ejection
- Eject back check
- Water flow5 sets
- Locating ring
- Mold ejector protect interface
- Low speed mold movement
- Air blow (2 sets)
- Emergency stop(operate&non operate side)
- Mounting Holes of robot installation
- Central lubrication system
- Mold open&close flexible control

Operation&Monitor

- 12 inch color touch screen
- Mold data saving(max200)
- Alarm history
- Modifying records
- 3 set USB interface
- Injection pressure /speed curve display
- EUmap12
- Multi-language
- International unit switch
- I/O display
- Printer interface(USB)
- Cycle monitor
- Production management
- Product data record(5000 cycle display, 100 thousands cycle saving)
- Product data graph
- Product quality judgment
- Product quality fail alarm
- Cycle counter
- Machine main status display
- Parameter fast set
- Maintenance management
- Clamping force curve monitor
- Barrel heat monitor
- Action cycle sequence display
- Three color alarm light (red/yellow/green)
- Buzzer
- Over injection protection(HPM pressure abnormal protection)
- Real value display
- Trouble shooting selection

Other

- Bole standard color
- Enclosed safety door
- Adjustable level pad
- Socket 4 sets（380V 16A 2 set，220V 10A 2 set）
- Tool box
- Spare parts,machine shield

Optional Configuration Menu of BL50-450FE

Charge,Injection

- Chrome plated screw&barrel set
- Anti-wear and corrosion screw&barrel set
- High power heating band for nozzle
- Extending nozzle
- Mold pressure V/P switch function
- Air shut off nozzle
- Spring shut off nozzle
- Special head nozzle
- Standard hopper
- Stainless hopper

Clamp Unit

- Air blast for fix and moving platen
- Air ejector
- Hydraulic station(for core and valve gate)
- Hydraulic core (programmable)
- Pneumatic core(programmable)
- ValveGate control device
- Water flow meter
- Special platen(T slot,screw hole)
- Electrical circuits for gear driving
- Enlarged max mold height
- Mold slider protection function
- Ejector compression function
- Mold auto clampdevice(pneumatic/hydraulic)
- Ejector with brake
- Inner hot runner
- Product fall plate
- Electrical door
- Close loop clamping force
- Quality pick device
- Product falling sensor

Operation&Monitor

- Mold temp control
- Quality pick electrical interface
- Heating break detector
- Add cooling water line
- External transformer
- Eu67 robot interface
- Gas assisted injection
- Magnetic template interface
- Mold inner pressure detector interface

Other

- Infrared heating for barrel
- Energy saving cover for barrel

Due to the continuous product improvement, we reserve the right to adjust the individual parameters, without notice.