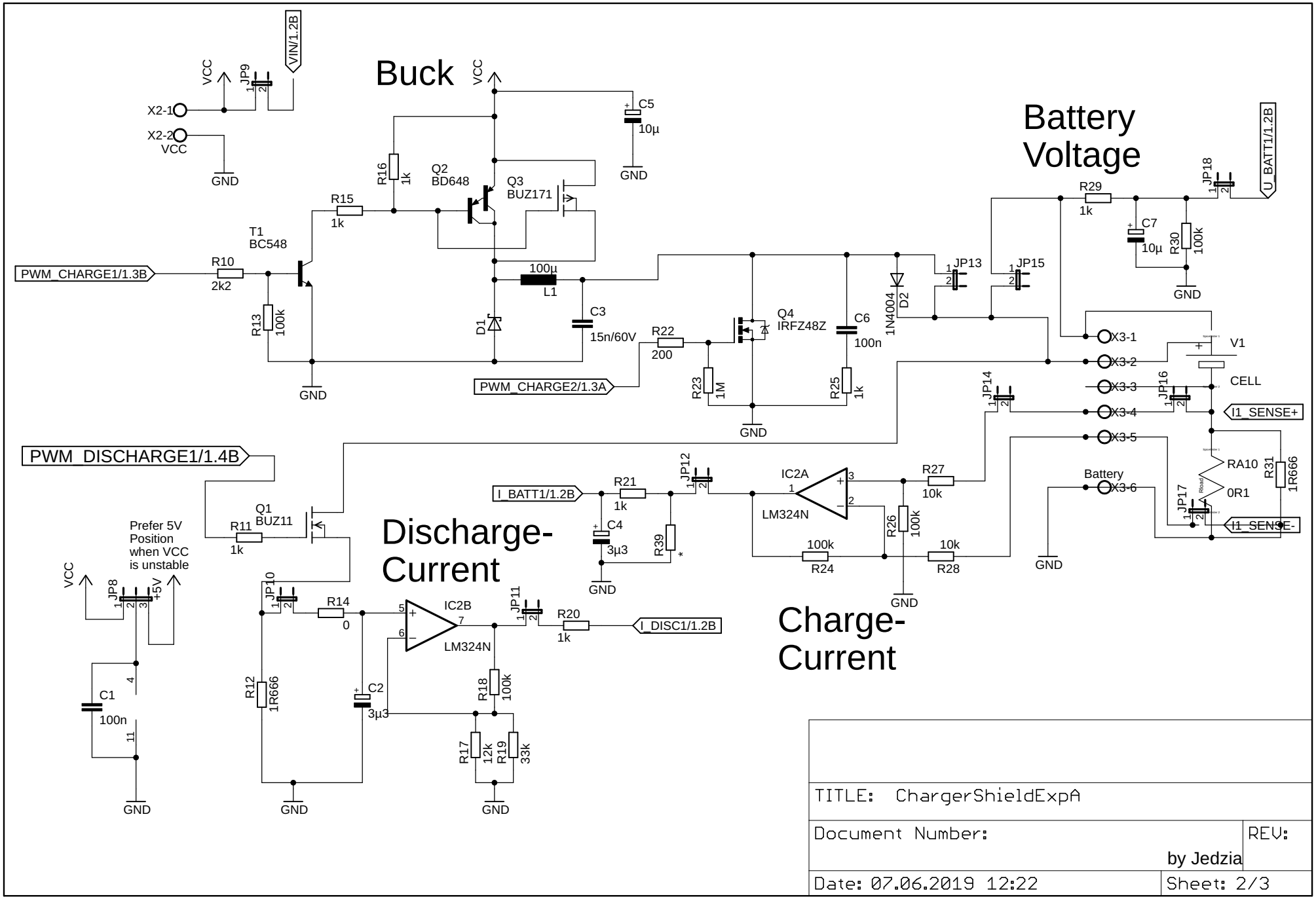
Buck
Battery Voltage
Discharge-Current
Charge-Current
VIN/1.2B
VCC
JP9
X2-1
X2-2
GND
C5
10µ
R16
1k
Q2
BD648
Q3
BUZ171
R15
1k
T1
BC548
R10
2k2
PWM_CHARGE1/1.3B
R13
100k
100µ
L1
D1
C3
15n/60V
R22
200
PWM_CHARGE2/1.3A
Q4
IRFZ48Z
R23
1M
R25
1k
C6
100n
1N4004
D2
JP13
JP15
R29
1k
C7
10µ
R30
100k
JP18
U_BATT1/1.2B
X3-1
X3-2
X3-3
X3-4
X3-5
X3-6
V1
CELL
JP16
I1_SENSE+
I1_SENSE-
RA10
0R1
R31
1R666
JP17
Battery
JP14
PWM_DISCHARGE1/1.4B
Q1
BUZ11
R11
1k
Prefer 5V Position when VCC is unstable
JP8
+5V
C1
100n
JP10
R14
0
IC2B
LM324N
JP11
R20
1k
I_DISC1/1.2B
R12
1R666
C2
3µ3
R18
100k
R17
12k
R19
33k
I_BATT1/1.2B
R21
1k
JP12
C4
3µ3
R39
*
IC2A
LM324N
R27
10k
R26
100k
100k
R24
10k
R28
TITLE: ChargerShieldExpA
Document Number:
by Jedzia
REV:
Date: 07.06.2019 12:22
Sheet: 2/3