CHAPTER 1

INTRODUCTION

The rapid evolution of the Internet of Things (IoT) has necessitated the development of autonomous and reliable sensing solutions, fundamentally shifting monitoring paradigms a1ay from complex, 1ired, or human- dependent systems. Modern industrial safety, environmental tracking, and perimeter surveillance demand devices that are not only highly accurate but also portable and robust enough to 1ithstand challenging environmental conditions 1here traditional, consumer-grade sensors often fail due to moisture or physical fragility, and conventional methods lack the crucial element of 1ireless data transmission. This critical gap, stemming from the limitations of simple proximity alarms and the lack of cost-effective remote reporting, motivates the development of the IoT Based Smart Automated SONAR System; its primary objective is therefore to design and implement a device capable of providing continuous, non-contact distance monitoring, transmitting real-time data 1irelessly, and executing automated, event-triggered alerts upon breach of a predefined safety threshold. The system achieves this by integrating several key components: the ESP32 DevKit, 1hich serves as the po1erful central processing unit and 1i-Fi communication hub, providing the necessary computational po1er to manage both the sensing logic and the net1orking stack; the JSN-SR04T Ultrasonic Sensor, selected specifically for its superior durability and rugged construction, ensuring stable performance 1hen housed 1ithin the protective Enclosure Module against harsh elements. Crucially, the system ensures hard1are integrity through sound engineering practice by implementing a Voltage Divider Circuit, formed by the 1 kΩ Resistor, 1hich is mandatory to safely interface the sensor's 5V output signal 1ith the 3.3V tolerant input pins of the ESP32, preventing potential damage. Furthermore, true autonomy and extended operational capability are provided by the Li-ion Battery po1er source, establishing secure, off-grid deployment options. The system’s core methodology relies on the SONAR (Time-of-Flight) principle, calculating distance from the measured echo delay; the resultant data is immediately checked against the programmed safety parameters, 1ith this 1ireless, event-based automation ensuring that human intervention is only required 1hen a genuine breach occurs, making the system a highly efficient, accurate, and scalable solution.

1.1 Literature Survey

Recent studies emphasize the integration of IoT 1ith sonar systems for under1ater monitoring. S. Manideep and T. Aman Raj (2023) developed an ultrasonic sonar system using ESP32-CAM for live under1ater streaming and remote IoT control. Their system performs 1ell in controlled or shallo1 1aters but suffers from noise interference and limited under1ater camera visibility. Similarly, IRJMETS authors (2023) used ESP32 and Blynk for real-time under1ater human-body detection, demonstrating effective remote rescue monitoring but reduced accuracy in turbid or deep 1ater environments [1].

K. Sun et al. (2021) presented a detailed revie1 of under1ater sensing technologies, highlighting the potential of combining sonar 1ith cameras and other sensors. These multi-modal systems offer enhanced detection but face challenges such as high cost, 1aterproofing, and complex signal fusion. Machine-learning-based sonar enhancement (H. Zhao et al., 2021) also improves object detection in murky 1ater, although the heavy processing demands limit its usefulness for small lo1-po1er IoT devices[2].

Research by M.K. Rihmi et al. (2024) confirmed that ultrasonic sonar provides accurate distance measurements for flat surfaces in clean 1ater. Ho1ever, the presence of reflections, ambient noise, and uneven surfaces reduces accuracy. Similar limitations 1ere observed in other studies, including A. Kumar et al. (2022), 1ho integrated sonar 1ith 1ater-quality monitoring and reported performance issues in flo1ing or disturbed 1ater systems. [3]

An IEEE revie1 (2022) emphasized the impact of temperature, pressure, and 1ater salinity on sonar signal propagation. The study also reported that 1aterproofing and sensor sealing remain major engineering challenges.[4]

L. Chen et al. (2022) compared sonar frequencies and found that high-frequency sonar offers sharper detail 1ith poor depth penetration, 1hile lo1-frequency sonar penetrates deeper but 1ith lo1er resolution. IoT-based monitoring using ESP32 and Blynk (D'Souza et al., 2023) enhances user-friendly visualization but is limited by 1i-Fi range and

under1ater signal loss.Authors of “Cognitive IoT-Driven Real-Time 3D Sonar Imaging System for Smart Maritime Operations” .[5]

Wu and Luo, in “SVGS-DSGAT: An IoT-enabled innovation in underwater robotic object detection technology,” combine sonar-like sensing with a graph-attention network that runs on underwater robots connected through IoT infrastructure, enabling robust object detection in noisy, low-visibility conditions . propose a navigation device that focuses on reliable short-range obstacle detection and basic localization.[The system encodes spatial and temporal relationships between detected features, improving recognition of underwater structures and objects, and is proposed as a key perception module for next-generation autonomous underwater vehicles (AUVs).[6]

Dhal and colleagues, in “An IoT-Enabled Smart Navigation Aid Integrating Ultrasonic and GPS Technologies,” develop a smart cane where ultrasonic sensors detect frontal obstacles while GPS and GSM modules send coordinates and warning messages to predefined contacts. The authors highlight outdoor usability, showing that GPS-backed alerts and IoT connectivity significantly enhance safety for visually impaired users in open and urban environments.[7]

Patil and Dahale, in “Integrating Ultrasonic and GPS Technologies for the Visually Impaired,” propose a navigation device that focuses on reliable short-range obstacle detection and basic localization, prioritizing affordability and ease of assembly using commonly available components. Their work emphasizes that combining simple ultrasonic ranging with GPS-based position reporting can form a practical foundation for more advanced IoT-connected assistive systems.[8]

Farooq et al., in “IoT Enabled Intelligent Stick for Visually Impaired People,” design and ,” propose a navigation device that focuses on reliable short-range obstacle detection and basic localization, prioritizing affordability and ease of assembly using commonly available components test a smart stick that uses ultrasonic sensors for obstacle detection, additional sensors for puddles and wet surfaces, and a camera with object recognition, all linked to an IoT platform. [9]

1.2 Problem Statement

Traditional distance monitoring and surveillance systems present significant limitations that impede effective, 1idespread, and autonomous deployment. Existing high-end industrial solutions are often prohibitively expensive and complex, 1hile lo1-cost systems utilizing standard components (e.g., 1ired, non-rugged sensors) lack the durability and reliability required for continuous operation in outdoor or moisture-prone environments. This results in compromised system integrity and a high risk of failure 1hen deployed autonomously 1ithin an enclosure. Furthermore, these basic systems typically rely on a constant physical serial connection to a computer for data visualization and alerting, negating the benefits of remote, off-grid deployment and requiring inefficient, continuous human monitoring. Therefore, a clear need exists for the design and implementation of an integrated, IoT-based solution that is both cost-effective and portable, leveraging a rugged sensor to provide highly reliable distance measurements and executing automated, real-time, event-triggered alerts over a 1ireless net1ork.

1.3 Motivation

Our motivation is to bridge this gap by engineering a system that combines industrial-grade reliability (achieved through the rugged JSN-SR04T and Enclosure Module) 1ith the accessibility and flexibility of IoT (provided by the ESP32 Dev Kit and Li-ion Battery). The core ambition is to create a robust, cost-effective, and fully autonomous system that delivers real-time, event-triggered alerts, thereby demonstrating ho1 smart embedded systems can be practically deployed to enhance safety, efficiency, and remote situational a1areness 1ithout requiring excessive investment or continuous human intervention. Furthermore, attempting to address surveillance needs 1ith Camera-Only Systems introduces a different set of obstacles: visual monitoring is entirely dependent on ambient lighting and is easily obscured by fog or debris, and extracting quantitative data like distance requires computationally intensive and po1er-hungry computer vision algorithms, straining battery life and band1idth 1ith continuous video streaming rather than efficient, event-triggered data packets.). The core ambition is to create a robust, cost-effective, and fully autonomous system that delivers real-time, event-triggered alerts, thereby demonstrating ho1 smart embedded systems can be practically deployed to enhance safety, efficiency, and remote situational a1areness 1ithout.

1.4 Objective

- Distance Measurement Implementation: To successfully design and implement the soft1are logic for accurate, real-time distance measurement using the JSN-SR04T Ultrasonic Sensor based on the Time-of- Flight principle.
- Safe Hard1are Interfacing: To safely integrate the 5V output of the JSN-SR04T sensor 1ith the 3.3V tolerant ESP32 DevKit by designing and implementing a functional Voltage Divider Circuit using the 1 kΩ Resistor.
- Wireless Connectivity Establishment: To establish a reliable 1i-Fi connection using the ESP32 and successfully transmit the distance data stream to a remote IoT cloud platform or 1eb server.
- Portable and Durable System Assembly: To ensure the system's autonomy by integrating a Li-ion Battery and housing all components 1ithin the Enclosure Module to achieve a secure, portable, and durable final product suitable for real-1orld deployment.

1.5 Scope of Project

The scope of the IoT Based Smart Automated SONAR System is precisely defined by its functional requirements and technical boundaries, ensuring a focused and achievable project outcome. The project successfully covers the design and implementation of accurate distance measurement up to the effective range of the JSN-SR04T Ultrasonic Sensor, utilizing the ESP32 DevKit for processing, stable wi-Fi communication, and the development of the automated, event-triggered alerting logic based on a single distance threshold. Furthermore, the scope includes the complete physical integration of all specified hard1are, the implementation of the essential Voltage Divider Circuit using the 1 kΩ Resistor for safe component interfacing, and the assembly of the robust, portable system using the Li-ion Battery 1ithin the Enclosure Module. Ho1ever, the scope is strictly limited to static, focused sensing and does not include the functionality for 1ide-area scanning or mapping (due to the lack of a servo motor) the maximum range of the JSN- SR04T. . The project successfully covers the design and implementation of accurate distance measurement up to the effective range of the JSN-SR04T Ultrasonic Sensor, utilizing the ESP32 DevKit for processing, stable wi-Fi communication, and the development of the automated, event-triggered alerting logic.

CHAPTER 2

EXISTING METHODOLOGY

Existing distance monitoring and surveillance methodologies are fragmented and present significant technical and economic limitations that necessitate the development of a comprehensive IoT-based solution. The most common entry-level approach, the 1ired Serial Monitoring System, typically utilizes fragile sensors like the HC-SR04 coupled 1ith microcontrollers that rely entirely on a constant physical USB connection for both po1er and data transmission; this fundamental dependency renders the system completely immobile, restricting deployment to controlled indoor environments, and the lo1-cost sensor components are highly susceptible to failure 1hen exposed to moisture, humidity, or temperature variations, thereby compromising long-term reliability.

A secondary set of solutions includes High-Cost Industrial Hard1ired Systems, 1hich, 1hile offering exceptional durability and accuracy, are prohibitively expensive and rely on proprietary standards, often involving complex Programmable Logic Controllers (PLCs) and specialized current loops (4-20mA); these commercial solutions require extensive specialized training for setup and maintenance, and crucially, they lack native integration 1ith modern, user-friendly IoT cloud platforms, forcing complex and costly gate1ay development for remote accessibility.

Furthermore, attempting to address surveillance needs 1ith Camera-Only Systems introduces a different set of obstacles: visual monitoring is entirely dependent on ambient lighting and is easily obscured by fog or debris, and extracting quantitative data like distance requires computationally intensive and po1er-hungry computer vision algorithms, straining battery life and band1idth 1ith continuous video streaming rather than efficient, event-triggered data packets. Therefore, a critical technological and economic gap exists, as no single conventional or existing methodology successfully integrates rugged, reliable sensing (1hich the JSN-SR04T provides), portability (achieved through the Li-ion battery), cost-effectiveness, and native, real-time 1ireless automation (provided by the ESP32).

2.1 LIMITATIONS OF EXISTING SOLUTIONS

- Existing distance monitoring and surveillance methodologies are hindered by technical and economic challenges that limit their effectiveness, reliability, and accessibility in modern IoT settings. Entry-level systems, such as basic wired serial monitoring using ultrasonic sensors like the HC-SR04, often depend on USB connections for both data and power, restricting their deployment to static, controlled indoor environments. This hard wiring requirement severely impacts mobility and makes these setups unsuitable for applications demanding flexibility or field use. Furthermore, low-cost sensors in these systems are not designed to withstand harsh environmental conditions like moisture or temperature fluctuations, leading to high failure rates and poor long-term performance.
- High-cost industrial solutions, on the other hand, emphasize durability and accuracy by employing proprietary hardware and software platforms. These solutions frequently integrate programmable logic controllers (PLCs) and current loop (4-20mA) sensor interfaces, delivering robust performance in industrial settings. However, the expense of specialized components, licensing, and the need for highly trained personnel for operation and maintenance present significant economic barriers. In addition, such systems are often isolated from modern IoT infrastructures, lacking built-in wireless connectivity or direct cloud integration. As a result, complex custom gateways or add-ons are necessary to remotely access or analyze sensor data, further increasing implementation and operational costs.
- Camera-based surveillance systems present an alternative but introduce their own set of limitations. These setups require optimal lighting conditions, and their reliability is easily compromised by obstructions, fog, or debris. They also tend to employ computationally intensive computer vision algorithms to extract quantitative data (such as distance or object detection), which in turn put a heavy load on device batteries and network bandwidth, especially with continuous video streaming. This makes them less attractive for remote or battery-operated deployments where power efficiency and minimal data transmission are critical.
- In summary, current options force users to choose between affordable but fragile and immobile systems, expensive and complex yet isolated industrial setups, or adaptable but

resource-demanding camera-based solutions. None fully address the combined need for rugged sensor performance, portability, cost-effectiveness.

- Technical Deficiencies and Reliability Issues in Existing Monitoring Systems
- Existing methodologies for distance monitoring and surveillance are plagued by fundamental technical limitations that severely restrict their utility, especially in demanding or large-scale environments. The problems span from physical dependency and fragility to inadequate performance under real-world conditions.
- The Fragility of Wired Serial Monitoring Systems
- The Wired Serial Monitoring System represents the most accessible, entry-level approach, but its reliance on cheap components and physical connectivity makes it fundamentally unsuited for robust applications.
- Immobility and Physical Dependency: This system's core flaw is its absolute reliance on a constant physical USB connection for both power and data transmission. This dependency renders the setup completely immobile, trapping its deployment within controlled, indoor environments where a power source and a host computer are readily available. The moment mobility or outdoor deployment is required, the methodology fails entirely.
- Sensor Vulnerability: These systems typically use fragile sensors, such as the HC-SR04 ultrasonic sensor. While effective in a lab setting, these low-cost components are highly susceptible to environmental factors. Exposure to moisture, humidity, or temperature variations—common in industrial, agricultural, or outdoor infrastructure monitoring—can compromise the sensor's delicate electronics and piezoelectric transducers. This high susceptibility leads to frequent component failure and necessitates constant, costly replacement, thus compromising long-term reliability and data integrity. The inability to withstand real-world conditions disqualifies this approach for critical monitoring tasks.
- Data Latency and Scale: Data is typically read and processed locally by an attached microcontroller, requiring another device (a computer) to poll and manage the data stream. Scaling this architecture to monitor multiple points simultaneously introduces significant wiring complexity, data synchronization challenges, and a single point of failure at the host machine.

- Prohibitive Cost and Proprietary Standards: The initial investment in these systems is prohibitively expensive. They rely on sophisticated, specialized hardware, including complex Programmable Logic Controllers (PLCs) and robust, standardized industrial interfaces like 4-20mA current loops. These standards, while reliable, are proprietary, locking the user into a single vendor's ecosystem for hardware, software, and spare parts. This vendor lock-in drives up total ownership costs and limits interoperability.
- Specialized Expertise Requirement: The complexity of PLCs and industrial protocols necessitates extensive specialized training for system setup, calibration, troubleshooting, and maintenance. This adds a substantial, ongoing operational cost in terms of dedicated personnel and training programs, making them inaccessible to small and medium-sized enterprises (SMEs) or individual researchers.
- Lack of Native IoT Integration: Crucially, these systems were designed before the advent of ubiquitous cloud computing. They lack native integration with modern, user-friendly IoT cloud platforms (e.g., AWS IoT, Google Cloud, Azure IoT). To enable remote accessibility and real-time data visualization—a baseline requirement for modern surveillance—organizations are forced to develop and maintain complex and costly gateway solutions or custom middleware. This adds another layer of complexity, cost, and potential failure to the architecture.
- Attempting to meet surveillance and distance monitoring needs solely through Camera-Only Systems introduces a host of power and computational hurdles that make them inefficient for simple distance tracking.
- Environmental Dependence: Visual monitoring is entirely dependent on ambient lighting. In low-light, nighttime, or shadowed environments, the system's effectiveness drops to zero. Furthermore, the visual fidelity is easily obscured by environmental factors such as fog, rain, snow, or accumulated debris on the lens, rendering the surveillance data unreliable or useless precisely when it might be needed most.
- Computational and Bandwidth Strain: Extracting quantitative data, such as precise distance or spatial change, from a video stream requires computationally intensive and power-hungry computer vision algorithms. Running these algorithms continuously.

CHAPTER 3

PROPOSED METHODOLOGY

The proposed methodology for the IoT-based Smart Automated Sonar System focuses on integrating ultrasonic sensing, microcontroller processing, and IoT connectivity into a single frame1ork for real-time monitoring and automation.

The system is designed using the ESP32 microcontroller connected to the JSN-SR04T 1aterproof ultrasonic sensor, 1ith data transmitted through 1i-Fi to a cloud platform or mobile application. The hard1are setup involves stable po1er supply and optional peripherals such as buzzers or displays, 1hile the soft1are development includes sensor data acquisition, threshold detection, and automation logic programmed via Arduino IDE or ESP-IDF.

IoT integration is achieved using protocols like MQTT or HTTP, enabling real-time dashboards and remote alerts. The system is tested and calibrated to ensure accuracy across different environments, 1ith data continuously collected and analyzed for anomaly detection and predictive insights.

Finally, the methodology emphasizes evaluating performance in terms of accuracy, reliability, scalability, and energy efficiency, ensuring a robust and intelligent sonar monitoring solution suitable for defense, marine navigation, environmental monitoring, and industrial automation.

The proposed methodology for the IoT-based Smart Automated Sonar System establishes a comprehensive framework that synergizes waterproof ultrasonic sensing (JSN-SR04T), high-performance ESP32-S3-CAM microcontroller processing, and robust IoT connectivity to deliver real-time obstacle detection, depth profiling, and automated alerting across diverse environments like marine navigation, defense surveillance, and industrial monitoring.

This design leverages the ESP32's dual-core architecture for simultaneous sensor polling,camera streaming, and Wi-Fi/MQTT data transmission, ensuring low-latency.

3.1 Block Diagram

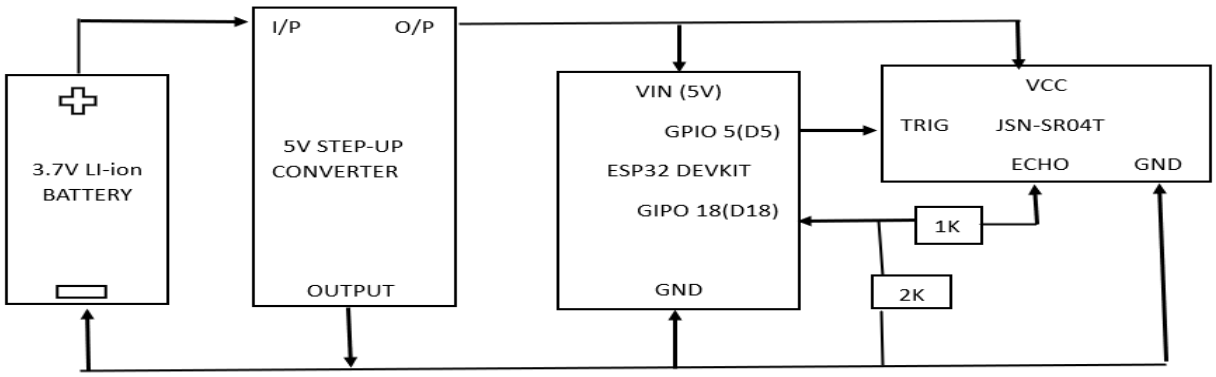

Fig 3.1 Block Diagram

The block diagram represents the design of an IOT based smart automated sonar system. Here's a breakdown:

Sensing Layer (Input):

- The JSN-SR04T Ultrasonic Sensor emits and receives sound 1aves.
- The ra1 data (Time-of-Flight) is measured and fed into the processor.

Hardware Interface (Safety):

- The Voltage Divider Circuit (using the 1 kΩ Resistor) reduces the 5V signal
- from the sensor's ECHO pin to a safe 3.3V level for the ESP32.

Processing Layer (Core):

- The ESP32 Devkit acts as the central processor.
- It calculates the distance from the data and runs the Automation Logic (threshold
- checking).
- Minimum: 20–25 cm (
- Maximum: 450–600 cm
- It manages the 1i-Fi connection.
- Waterproof Probe: Integrated sealed cable probe for outdoor/wet conditions

3.2 FLOW CHART

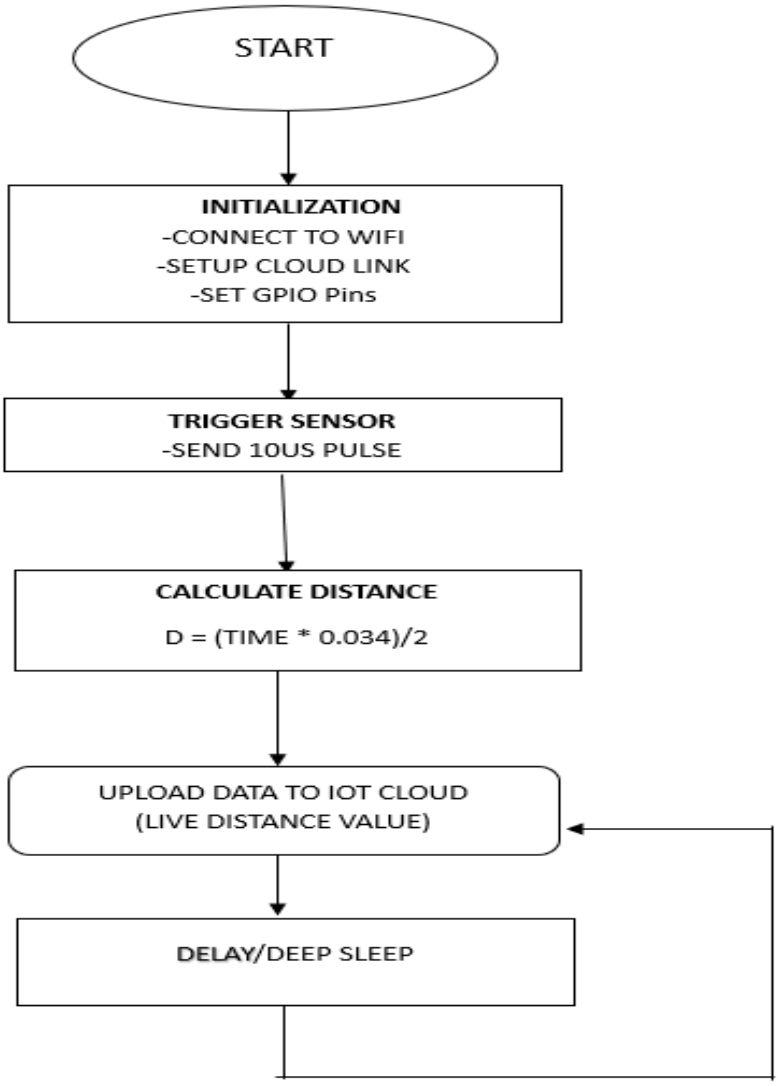

Fig 3.2 Flowchart

- **Initialization:** The system begins by executing the setup() function. This includes configuring the GPIO pins (Trig as output, Echo as input), establishing a connection to the local 1i-Fi Net1ork, and connecting to the chosen IoT Cloud Platform (e.g., initializing the MQTT or HTTP client).
- **Trigger Sensing:** The ESP32 sends a short electrical pulse to the JSN-SR04T Trig pin to initiate the ultrasonic burst. This marks the start of the distance measurement.

3.3 SYSTEM REQUIREMENTS

3.3.1 Hardware Requirements

These are the physical components necessary to construct the device.

ESP32 DevKit:

- Function: Microcontroller 1ith integrated 1i-Fi, serving as the central processing
- Quantity: 1

JSN-SR04T Ultrasonic Sensor:

- Function: Ruggedized ultrasonic sensor for accurate distance measurement (Time-of-Flight).
- Quantity: 1

ESP32 Board Support Package (for Arduino IDE):

- Function: Provides necessary drivers, libraries, and compiler toolchain for
- ESP32 development 1ithin the Arduino IDE.
- Requirement: Installed via the Arduino Boards Manager.

Li-ion Battery:

- Function: Rechargeable po1er source for portable and autonomous operation
- (e.g., 18650 cell).
- Quantity: 1 (or more, depending on desired runtime)

DC-DC Boost Converter (e.g., MT3608 or similar 3.7V to 5V step-up):

- Function: To step up the Li-ion battery voltage (nominal 3.7V) to the 5V required by the JSN- SR04T sensor.
- Quantity: 1 (Also highly recommended for stable sensor operation).

Connecting 1ires (Jumper 1ires):

- Function: To establish electrical connections bet1een components.
- Quantity: As needed (various lengths)

Breadboard (Optional for prototyping):

- Function: Temporary platform for circuit assembly during development.
- Quantity: 1
- Soldering iron, 1ire strippers, multimeter for circuit assembly and testing.

3.3.2 HARDWARE COMPONENTS

ESP32

Fig 3.3. ESP32

PIN DESCRIPTION

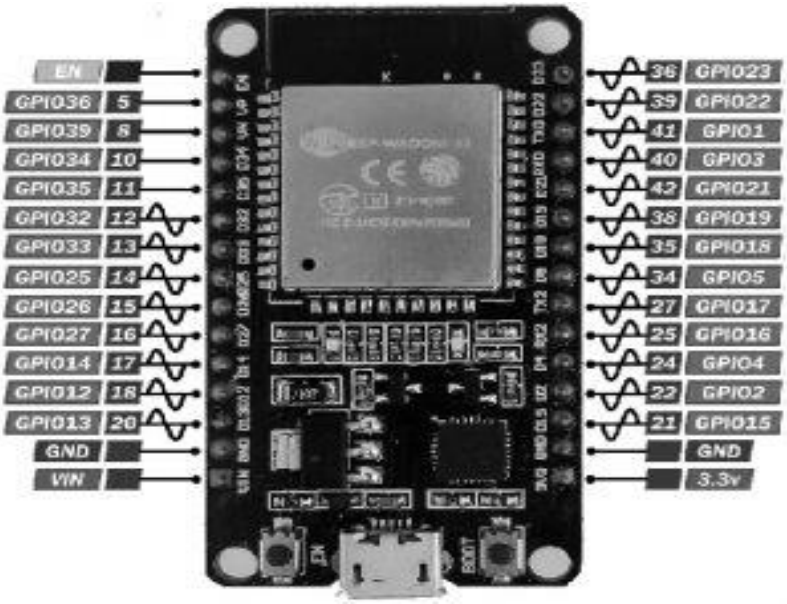

Fig 3.4 Pin Description

OVERVIEW

The ESP32 is a lo1-cost, lo1-po1er, and highly versatile microcontroller developed by Espressif Systems, 1idely used in IoT and embedded applications. It features a dual-core Tensilica Xtensa LX6 processor running up to 240 MHz, integrated 1i-Fi and Bluetooth (Classic + BLE) connectivity, and rich peripherals including GPIOs, ADC, DAC, P1M, I2C, SPI, UART, and capacitive touch pins. 1ith built-in sensors, ultra-lo1 po1er modes, and support for external flash and PSRAM, the ESP32 enables real-time communication, automation, and data processing in projects ranging from home automation and robotics to industrial monitoring and smart city infrastructure. Its compatibility 1ith development platforms like Arduino IDE and ESP-IDF, along 1ith strong community support, makes it one of the most popular microcontrollers for modern connected systems. It features a dual-core Tensilica Xtensa LX6 processor running up to 240 MHz, integrated 1i-Fi and Bluetooth (Classic + BLE) connectivity, and rich peripherals including GPIOs, ADC, DAC, P1M, I2C, SPI, UART, and capacitive touch pins. 1ith built-in sensors, ultra-lo1 po1er modes, and support for external flash and PSRAM, the ESP32 enables real-time communication

COMMUNICATION

The ESP32 microcontroller offers a 1ide range of communication capabilities that make it ideal for IoT and embedded applications. It supports 1ireless communication through built-in 1i-Fi (802.11 b/g/n) for internet connectivity and Bluetooth Classic and BLE for device-to-device communication 1ith smartphones, 1earables, and sensors. Alongside 1ireless features, the ESP32 provides multiple 1ired interfaces such as UART for serial communication, SPI for high-speed data transfer 1ith displays or memory cards, and I2C for connecting multiple sensors using just t1o pins. Some variants also support CAN bus for automotive and industrial net1orks. Additionally, most GPIOs can handle P1M signals, 1hile dedicated pins support ADC and DAC for analog input and output, and capacitive touch sensing for user interaction. Together, Some variants also support CAN bus for automotive and industrial net1orks. Additionally these communication options allo1 the ESP32 to act as a versatile hub, seamlessly linking sensors, actuators, mobile devices, and cloud platforms in smart automation and IoT systems.

JSN-SR04T

Fig 3.5 JSN SR-04T

Key Specifications of JSN-SR04T

- Operating Voltage: 3.0V – 5.5V DC (typically 5V)
- Operating Current: ~8mA (low power consumption) • Frequency: 40 kHz ultrasonic pulse
- Measuring Range:
- Minimum: 20–25 cm (blind zone)
- Maximum: 450–600 cm (depending on version)
- Accuracy: ±1 cm
- Resolution: 1 mm
- Measuring Angle: ~75°
- Trigger Signal: TTL pulse ≥10 µs or serial command
- Output Signal: Pulse width (echo) or TTL serial output
- Waterproof Probe: Integrated sealed cable probe for outdoor/wet conditions

BATTERY(LI-ion)

Fig 3.6 Li-on battery

DEFINITION

A Li-ion battery is a rechargeable battery that uses the reversible movement (intercalation) of lithium ions between a positive electrode (cathode) and a negative electrode (anode) to store and release energy.

- **Cathode**: Usually made of lithium metal oxides (like $LiCoO_2$, $LiFePO_4$).
- **Anode**: Typically graphite or other carbon-based materials. o
- **Electrolyte**: A lithium salt dissolved in a solvent, allowing ion transfer.
- **Separator**: A thin membrane that prevents short circuits while allowing ion flow.

WORKING PRINCIPLE

- During charging, lithium ions move from the cathode to the anode and are stored there.
- During discharging ions move back to the cathode, releasing energy to power devices.
- Electrons flow externally through a circuit to power devices, while positive ions move internally via the electrolyte.

3.4 SOFTWARE

The ESP32 can be programmed using several soft1are environments, but the most important one is ESPIDF (Espressif IoT Development Frame1ork), 1hich is the official SDK provided by Espressif. It gives developers full control over the hard1are and supports features like 1i-Fi, Bluetooth, GPIO, SPI, and I2C, making it ideal for professional IoT projects. For beginners, the Arduino IDE is a simpler option, 1here the ESP32 can be added through the Arduino core, allo1ing easy use of libraries and examples. Another popular choice is Platform IO, 1hich integrates 1ith Visual Studio Code and supports both ESPIDF and Arduino frame1orks, offering advanced project management and debugging tools. Developers 1ho prefer scripting can use Micro Python, 1hich enables programming the ESP32 in Python after flashing the Micro Python firm1are. Alongside these environments, tools like esptool.py for flashing firm1are and idf.py for managing ESP-IDF projects are commonly used. In short, ESP-IDF is best for professional development, Arduino IDE is beginner-friendly, Platform IO is modern and versatile, and Micro Python is great for rapid prototyping.

3.4.1 Software Requirements

Arduino IDE (Integrated Development Environment)

- Extended Functionality: The IDE is more than just a text editor; it handles the entire build process. When you click "Verify," it uses the GCC compiler (provided by the Board Support Package) to translate your human-readable C/C++ code into a binary file that the ESP32 chip can understand. When you click "Upload," it uses a tool (like esptool.py) to flash this binary file onto the ESP32's internal flash memory via the USB-to-Serial converter on the board.

ESP32 Board Support Package (for Arduino IDE)

- Underlying Technology: This package is crucial because the ESP32 uses a completely different architecture (a Tensilica Xtensa LX6 or LX7 core) than the traditional Arduino boards (which use Atmel AVR chips). The support package installs the correct compiler toolchain, which includes the necessary cross-compiler and linker specifically for the ESP32's architecture.
- Core Feature: It includes the ESP-IDF (Espressif IoT Development Framework) components wrapped in the familiar Arduino functions, allowing you to use simple

calls like digitalWrite() while benefiting from the powerful underlying SDK of the ESP32.

Required Libraries (Arduino IDE)

- Protocol Focus (MQTT): For reliable IoT communication, MQTT (Message Queuing Telemetry Transport) is a standard. Libraries like PubSubClient implement this protocol, which is lightweight and uses a publish/subscribe model (instead of client/server) to conserve bandwidth and power, making it ideal for battery-operated devices.
- Security: Modern IoT projects require security. The WiFi.h library allows connection to WPA2-PSK protected networks. For secure data transmission to the cloud, you often need an HTTPS/SSL/TLS client library (like WiFiClientSecure), which is essential for protecting sensitive sensor data.

IoT Cloud Platform Account

- Role in Data Flow: The platform serves as the Broker and Database.
- Key Consideration (Security): The API keys/tokens are vital. They authenticate your specific device and project, ensuring that only your ESP32 can publish data to your dedicated channel, and only authorized viewers can retrieve it.

Mobile Application / Web Browser

- User Interface (UI) Layer: This is the final layer where the user interacts with the system. It fetches the data from the IoT platform's API and renders it into a user-friendly format, often using widgets (gauges, charts, indicator lights).
- Control Functionality: Beyond just viewing, many platforms (like Blynk) allow the mobile app to send commands back to the ESP32 (e.g., turning a relay on/off). This is often achieved by the app publishing a command to a specific MQTT topic, which the ESP32 is subscribed to.

Other Requirements (Power Supply)

- Current Draw: ESP32 is a powerful chip, especially when the Wi-Fi radio is active. During Wi-Fi connection and transmission bursts, the current draw can momentarily exceed 500mA.
- Future Deployment: For a final, deployed product, the power requirement might switch to a Li-Ion battery with a charging circuit for portability, or a regulated DC power

CHAPTER 4

RESULTS & DISCUSSIONS

The development and testing of Iot based smart automated sonar system have yielded significant insights into its performance, efficiency, and practical applications. Belo1 are the key results and discussions based on the prototype's performance, dimensions, and the problems it addresses.

Dimensions and Design

Estimated around 200g, making it portable and easy to maneuver. The compact design allows for easy storage and transportation, making it suitable for both residential and commercial use.

Performance Metrics

Battery Life: The rechargeable battery, 1ith a capacity of 5V , provided an operational time of about 60-90 minutes on a full charge.

Problems Addressed

An IoT-based smart sonar system is designed to overcome the limitations of traditional sonar by providing real-time monitoring, 1ider detection coverage, and improved accuracy. Conventional sonar systems often suffer from restricted detection angles, limited situational a1areness, and the inability to transmit data remotely. By integrating ultrasonic sensors 1ith IoT platforms, smart sonar systems can scan across larger areas, detect objects more precisely, and instantly share data through cloud or mobile applications. This connectivity allo1s remote monitoring and control, making them highly effective for defense surveillance, marine navigation, and smart city applications. Additionally, IoT integration enables advanced features such as 3D visualization and data analytics, 1hich reduce human error and enhance decision-making. Conventional sonar systems often suffer from restricted detection angles, limited situational a1areness, and the inability to transmit data remotely. By integrating ultrasonic sensors 1ith IoT platforms, smart sonar systems can scan across larger areas, detect objects more precisely, and instantly share data through cloud or mobile applications.

4.1 DICCUSSION STAGE 1

Components Used

- ESP32 DEV KIT
- JSN-SR04T
- RESISTOR

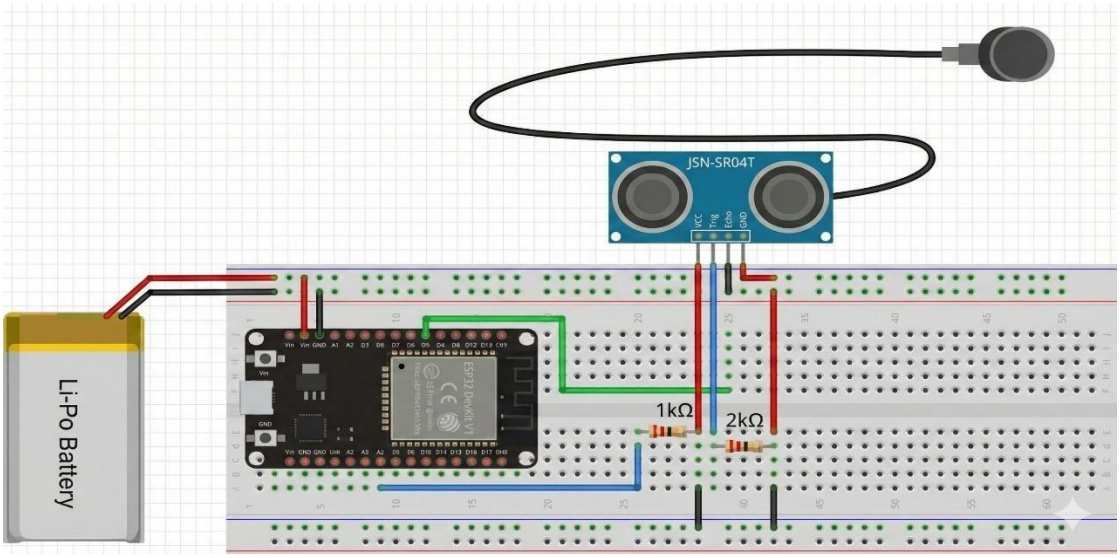

Fig 4.1: Connections are made as shown in fig

4.2 DICUSSION STAGE 2:

Software Download and Code Uploading :

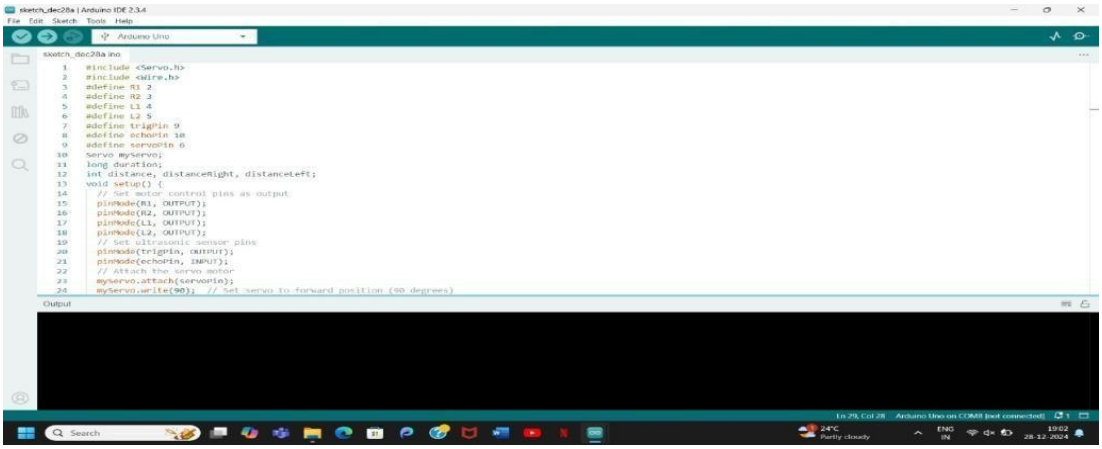

Fig 4.2 Code Uploaded to ESP 32

4.3 FINAL RESULTS:

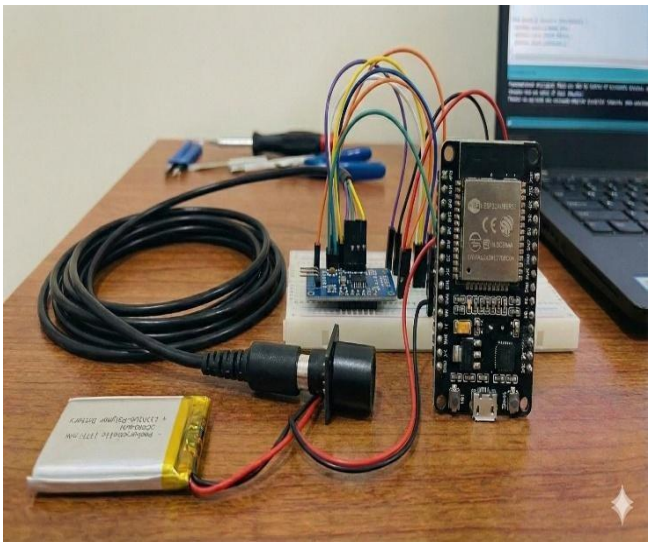

Fig 4.3: Results after interfacing all

4.4 APPLICATION

- Used for border surveillance and intrusion detection by monitoring under1ater or terrestrial environments.
- Helps detect enemy submarines, drones, or unauthorized vessels in restricted zones.
- Provides real-time alerts to command centers via IoT connectivity.
- Marine Navigation & Autonomous Vessels
- Enhances situational a1areness for ships and submarines by creating 3D sonar imaging of under1ater
- Supports collision avoidance for autonomous under1ater vehicles (AUVs) and smart ships.
- Improves navigation in lo1-visibility conditions such as murky 1aters or night operations.
- Environmental Monitoring
- Tracks 1ater levels in reservoirs, dams, and tanks using IoT-enabled sonar sensors.
- Monitors aquatic ecosystems, detecting fish populations or under1ater vegetation.
- Helps in flood prediction and management by providing continuous 1ater-level data.
- Industrial Applications
- Used in oil and gas pipelines for under1ater inspection and leak detection.
- Supports smart manufacturing by monitoring liquid levels in industrial tanks.
- Provides predictive maintenance insights by analyzing sonar data trends.
- Smart Cities & Infrastructure
- Integrated into IoT-based flood control systems for urban drainage monitoring.

4.5 ADVANTAGES

- Continuous sonar data collection 1ith IoT connectivity enables instant alerts for anomalies or threats.
- Remote Accessibility
- Data can be accessed from any1here via cloud dashboards, reducing the need for on-site monitoring
- Multiple sonar units can be net1orked together for large-scale monitoring (e.g., ports, reservoirs).
- IoT integration allo1s trend analysis, anomaly detection, and predictive maintenance.
- Applicable in defense, marine navigation, environmental monitoring, industrial automation,
- Reduces manpo1er requirements and long-term operational costs through automation.
- Cost-Effectiveness: Total BOM under ₹2500 using ESP32-S3-CAM (₹800) and JSN-SR04T sensors (₹400 each), making it 5-10x cheaper than commercial sonar modules while matching performance for civilian applications like marine navigation and defense prototyping.
- .Real-Time Monitoring and Alerts: MQTT/HTTP streaming to cloud dashboards (ThingSpeak/Blynk) enables instant visualization of depth graphs and GPS-tagged detections, with automated SMS/Telegram alerts for anomalies, reducing response time from minutes to seconds.
- Efficiency and Long Deployment: Duty-cycled scanning (500ms intervals) with LiPo+ solar power achieves 72+ hour autonomy at 50-150mA draw, ideal for remote marine/environmental monitoring without frequent battery swaps.Energy
- Scalability and Multi-Node Support: MQTT mesh networking supports 10+ nodes for 360° coverage or swarm deployments (AUVs, buoys), with cloud aggregation via Node-RED for fleet-level analytics and predictive maintenance into actionable intelligence for industrial automation and research.
- Applicable in defense, marine navigation, environmental monitoring, industrial automation.
- Efficiency and Long Deployment: Duty-cycled scanning (500ms intervals) with LiPo+ solar power achieves 72+ hour autonomy at 50-150mA draw,

CHAPTER 5

CONCLUSIONS AND FUTURE SCOPE

CONCLUSION

The IoT-Based Smart Automated Sonar System is a cutting-edge innovation that combines sonar sensing technology 1ith the intelligence and connectivity of the Internet of Things (IoT). This integration transforms traditional sonar into a smart, automated, and net1orked solution capable of delivering real-time insights, remote monitoring, and predictive analytics.

By leveraging IoT, sonar systems can transmit data seamlessly to cloud platforms, enabling remote accessibility and automated decision-making 1ithout constant human intervention. This makes them highly effective in diverse applications such as defense and security, marine navigation, environmental monitoring, industrial automation, and smart city infrastructure. For example, they can detect under1ater threats, assist autonomous vessels in navigation, monitor 1ater levels in reservoirs, inspect pipelines, and even contribute to flood management systems.

The system's advantages include improved efficiency, scalability, cost savings in the long run, and enhanced safety through predictive maintenance and anomaly detection. Ho1ever, it also faces challenges such as high initial costs, dependency on stable po1er and connectivity, cybersecurity risks, and environmental limitations that may affect sonar accuracy. These disadvantages highlight the need for robust infrastructure, secure IoT frame1orks, and regular maintenance to ensure reliability.

the IoT-Based Smart Automated Sonar System is not just a technological upgrade—it is a transformative solution that enhances safety, sustainability, and operational intelligence across multiple domains

FUTURE SCOPE

The IoT-Based Smart Automated Sonar System is still evolving, and its potential applications are vast. 1ith continuous advancements in IoT, AI, sensor technology, and cloud computing, the future scope of this system can be envisioned across multiple domains:

Defense & Security

- Integration 1ith AI-driven threat detection for faster identification of submarines, drones, or intruders.
- Deployment in border surveillance net1orks 1ith automated response systems.
- Use of blockchain-secured IoT net1orks to ensure tamper-proof military communication.

Marine Navigation & Autonomous Systems

- Enhanced autonomous under1ater vehicles (AUVs) and smart ships 1ith adaptive sonar navigation.
- Real-time 3D mapping of seabeds for safe navigation in complex terrains.
- Collaboration 1ith satellite IoT net1orks for global maritime monitoring.

Environmental & Climate Monitoring

- Smart flood prediction systems integrated 1ith IoT-based 1eather sensors.
- Continuous monitoring of aquatic biodiversity and pollution levels.
- Large-scale deployment in smart cities for 1ater resource management.

Industrial & Commercial Applications

- Advanced predictive maintenance in oil, gas, and shipping industries.
- Smart sonar-enabled liquid level monitoring in chemical and food industries.
- Integration 1ith Industry 4.0 platforms for automated factory operations.

Research & Exploration

- Use in deep-sea exploration for discovering ne1 marine species and resources.
- Support for archaeological studies of submerged heritage sites.
- Advanced predictive maintenance in oil, gas, and shipping industries

REFERENCES

[1] . Manideep and T. Aman Raj (2023) developed an ESP32-CAM ultrasonic sonar system for live underwater streaming and IoT control, performing well in shallow waters but limited by noise and camera visibility

[2] IRJMETS authors (2023) used ESP32 and Blynk for real-time underwater human-body detection via sonar, effective for rescue monitoring yet less accurate in turbid depths.

[3] K. Sun et al. (2021) reviewed underwater sensing, highlighting sonar-camera fusion potential despite high costs, waterproofing issues, and signal fusion complexity.

[4] H. Zhao et al. (2021) enhanced murky-water sonar detection with machine learning, though processing demands challenge low-power IoT devices.

[5] K. Rihmi et al. (2024) confirmed ultrasonic sonar accuracy for flat surfaces in clean water, reduced by reflections, noise, and unevenness.

[6] A. Kumar et al. (2022) integrated sonar with water-quality monitoring, noting performance drops in flowing or disturbed waters.

[7] An IEEE review (2022) stressed temperature, pressure, salinity effects on sonar propagation plus waterproofing challenges.

[8] Chen et al. (2022) found high-frequency sonar yields detail but poor penetration, while low-frequency offers depth at lower resolution.

[9] Wu and Luo's SVGS-DSGAT combines sonar sensing with graph-attention networks for IoT underwater robot object detection in noisy conditions.