Haptic Navigation Belt

PCB Design — Architecture & Pin Diagrams

Revision 1.0 | ESP32-WROOM-32 Platform

1. System Block Diagram

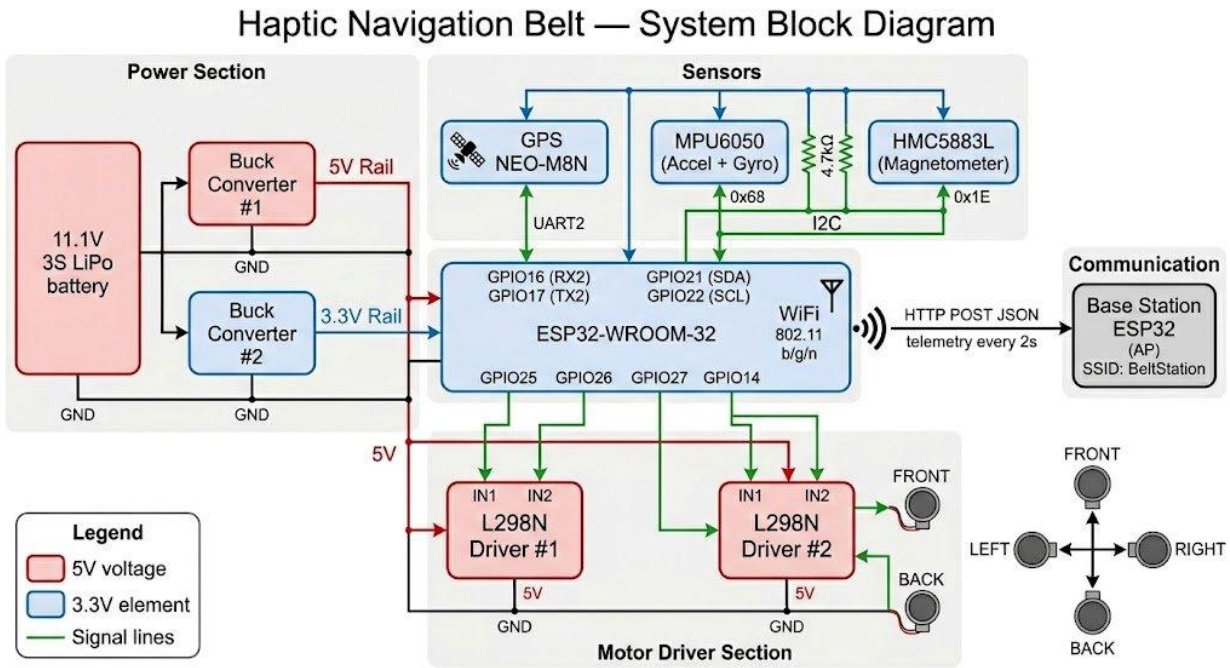

Figure 1: Haptic Navigation Belt — Full System Block Diagram

2. ESP32 Pin Assignments

ESP32 GPIO	Connected To	Signal	Voltage
GPIO 16	GPS NEO-M8N TX	UART2 RX (ESP receives)	3.3V
GPIO 17	GPS NEO-M8N RX	UART2 TX (ESP sends)	3.3V
GPIO 21	MPU6050 SDA + HMC5883L SDA	I2C Data (shared bus)	3.3V
GPIO 22	MPU6050 SCL + HMC5883L SCL	I2C Clock (shared bus)	3.3V
GPIO 25	L298N #1 IN1	Motor FRONT control	3.3V → 5V logic
GPIO 26	L298N #1 IN2	Motor RIGHT control	3.3V → 5V logic
GPIO 27	L298N #2 IN1	Motor BACK control	3.3V → 5V logic
GPIO 14	L298N #2 IN2	Motor LEFT control	3.3V → 5V logic
3V3	Sensor power rail	VCC for GPS, MPU6050, HMC5883L	3.3V

ESP32 GPIO	Connected To	Signal	Voltage
GND	Common ground	All modules share GND	—

3. Module Wiring Detail

3.1 GPS NEO-M8N (3.3V powered)

GPS Pin	Connects To
VCC	3.3V rail
GND	GND rail
TX	ESP32 GPIO 16 (RX2)
RX	ESP32 GPIO 17 (TX2)

3.2 MPU6050 (I2C addr: 0x68 — 3.3V powered)

MPU6050 Pin	Connects To
VCC	3.3V rail
GND	GND rail
SDA	ESP32 GPIO 21 (+ 4.7kΩ pull-up to 3.3V)
SCL	ESP32 GPIO 22 (+ 4.7kΩ pull-up to 3.3V)
AD0	GND (sets addr 0x68)

3.3 HMC5883L (I2C addr: 0x1E — 3.3V powered, shared bus)

HMC5883L Pin	Connects To
VCC	3.3V rail
GND	GND rail
SDA	ESP32 GPIO 21 (shared with MPU6050)
SCL	ESP32 GPIO 22 (shared with MPU6050)
DRDY	Not connected (polled mode)

3.4 L298N Driver #1 — FRONT + RIGHT motors (5V logic input)

L298N Pin	Connects To
VS (motor supply)	5V rail
VSS (logic supply)	5V rail
GND	GND rail
IN1	ESP32 GPIO 25 (FRONT)
IN2	ESP32 GPIO 26 (RIGHT)
OUT1	Vibration motor FRONT (+/-)
OUT2	Vibration motor RIGHT (+/-)
ENA	5V (always enabled) or jumper
ENB	5V (always enabled) or jumper

3.5 L298N Driver #2 — BACK + LEFT motors (5V logic input)

L298N Pin	Connects To
VS	5V rail
VSS	5V rail
GND	GND rail
IN1	ESP32 GPIO 27 (BACK)
IN2	ESP32 GPIO 14 (LEFT)
OUT1	Vibration motor BACK (+/-)
OUT2	Vibration motor LEFT (+/-)
ENA	5V (always enabled)
ENB	5V (always enabled)

4. Power Distribution (PCB Design)

The 11.1V 3S LiPo battery feeds two independent buck converters for clean power rail separation:

```
11.1V LiPo Battery
```

```
    │
    ├──► Buck Converter #1 → 5V Rail
    │        ├── L298N #1 (VS + VSS)
    │        ├── L298N #2 (VS + VSS)
    │        └── (ESP32 VIN if using bare module)
    │
    └──► Buck Converter #2 → 3.3V Rail
             ├── ESP32-WROOM module (VCC 3.3V direct)
             ├── GPS NEO-M8N (VCC)
             ├── MPU6050 (VCC)
             ├── HMC5883L (VCC)
             └── I2C pull-ups (4.7kΩ to 3.3V)
```

5. Design Notes

I2C Bus: Both MPU6050 and HMC5883L share GPIO21 (SDA) / GPIO22 (SCL). 4.7 kΩ pull-up resistors to 3.3V are required on each line. Addresses are 0x68 and 0x1E respectively — no conflicts.

Motor Logic Level: ESP32 GPIO outputs are 3.3V. The L298N IN pins accept 3.3V logic and drive 5V motor power — no level shifter required for the IN lines, though VS/VSS must be tied to the 5V rail.

WiFi Telemetry: ESP32 sends HTTP POST JSON telemetry to a base station ESP32 (AP mode, SSID: BeltStation) every 2 seconds.

GPS UART: NEO-M8N TX → GPIO16 (UART2 RX), NEO-M8N RX → GPIO17 (UART2 TX). Default baud rate is 9600; configure in firmware if using higher rates.