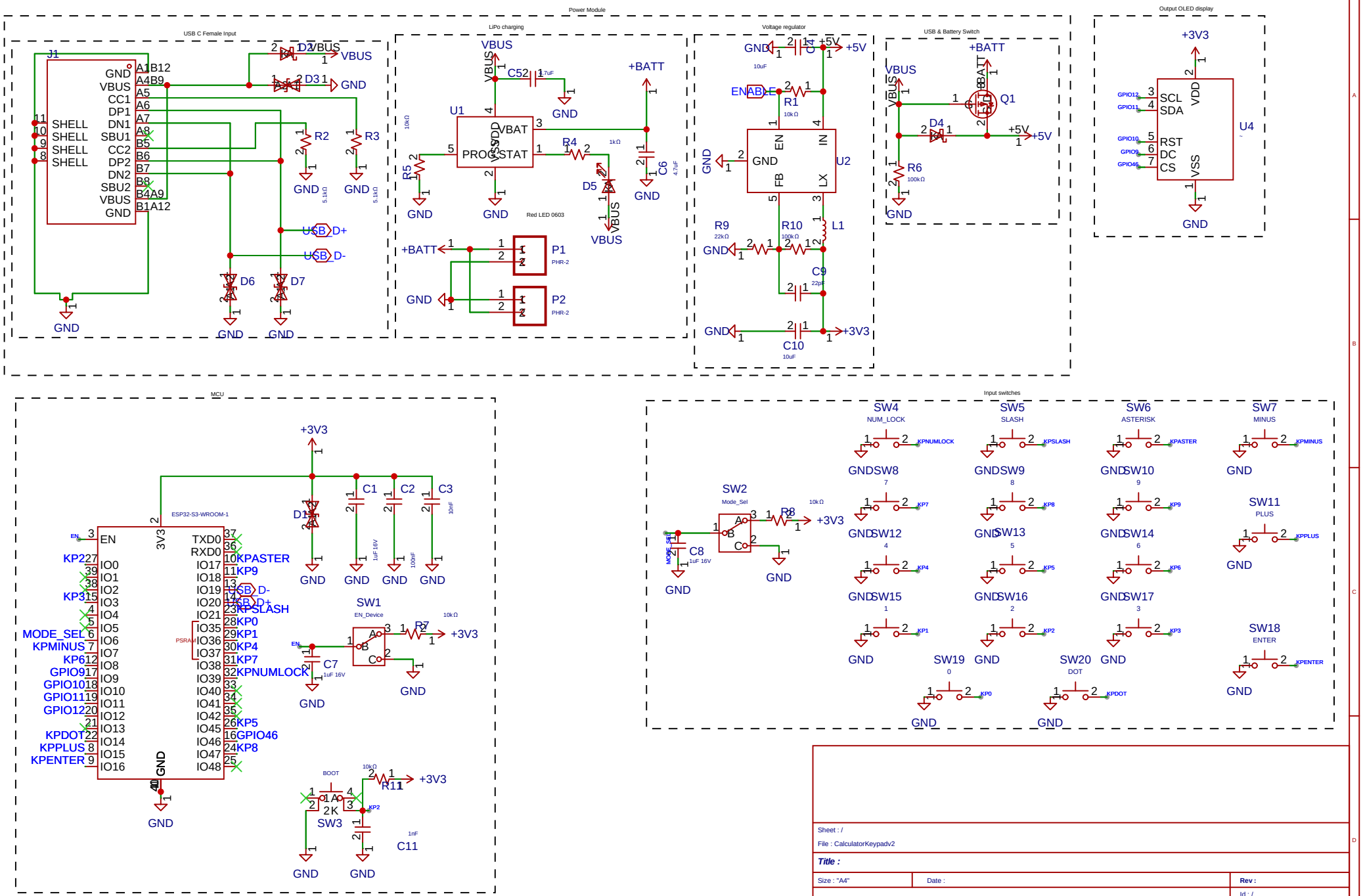
Power Module
USB C Female Input
J1
GND
VBUS
CC1
DP1
DN1
SBU1
CC2
DP2
DN2
SBU2
A1B12
A4B9
A5
A6
A7
A8
B5
B6
B7
B8
B4A9
B1A12
SHELL
D2
D3
R2
R3
5.1kΩ
USB_D+
USB_D-
D6
D7
LiPo charging
U1
VBAT
PROG
STAT
C52
4.7uF
R4
1kΩ
R5
10kΩ
D5
Red LED 0603
C6
4.7uF
+BATT
P1
PHR-2
P2
PHR-2
Voltage regulator
U2
EN
IN
FB
LX
ENABLE
R1
10kΩ
R9
22kΩ
R10
100kΩ
L1
C9
22pF
C10
10uF
+5V
+3V3
USB & Battery Switch
Q1
D4
R6
100kΩ
Output OLED display
U4
SCL
SDA
RST
DC
CS
VDD
VSS
GPIO12
GPIO11
GPIO10
GPIO9
GPIO46
MCU
ESP32-S3-WROOM-1
EN
3V3
IO0
IO1
IO2
IO3
IO4
IO5
IO6
IO7
IO8
IO9
IO10
IO11
IO12
IO13
IO14
IO15
IO16
TXD0
RXD0
IO17
IO18
IO19
IO20
IO21
IO35
IO36
IO37
IO38
IO39
IO40
IO41
IO42
IO45
IO46
IO47
IO48
PSRAM
KP2
KP3
MODE_SEL
KPMINUS
KP6
GPIO9
GPIO10
GPIO11
GPIO12
KPDOT
KPPLUS
KPENTER
KPASTER
KP9
KPSLASH
KP0
KP1
KP4
KP7
KPNUMLOCK
KP5
GPIO46
KP8
C1
C2
C3
10nF
1uF 16V
100nF
SW1
EN_Device
R7
10kΩ
C7
1uF 16V
SW2
Mode_Sel
R8
10kΩ
C8
1uF 16V
SW3
BOOT
R11
10kΩ
C11
1nF
Input switches
SW4
NUM_LOCK
SW5
SLASH
SW6
ASTERISK
SW7
MINUS
SW8
SW9
SW10
SW11
PLUS
SW12
SW13
SW14
SW15
SW16
SW17
SW18
ENTER
SW19
SW20
DOT
KPNUMLOCK
KPSLASH
KPASTER
KPMINUS
KP7
KP8
KP9
KP4
KP5
KP6
KP1
KP2
KP3
KPPLUS
KPENTER
KP0
KPDOT
Sheet : /
File : CalculatorKeypadv2
Title :
Size : "A4"
Date :
Rev :
Id : /