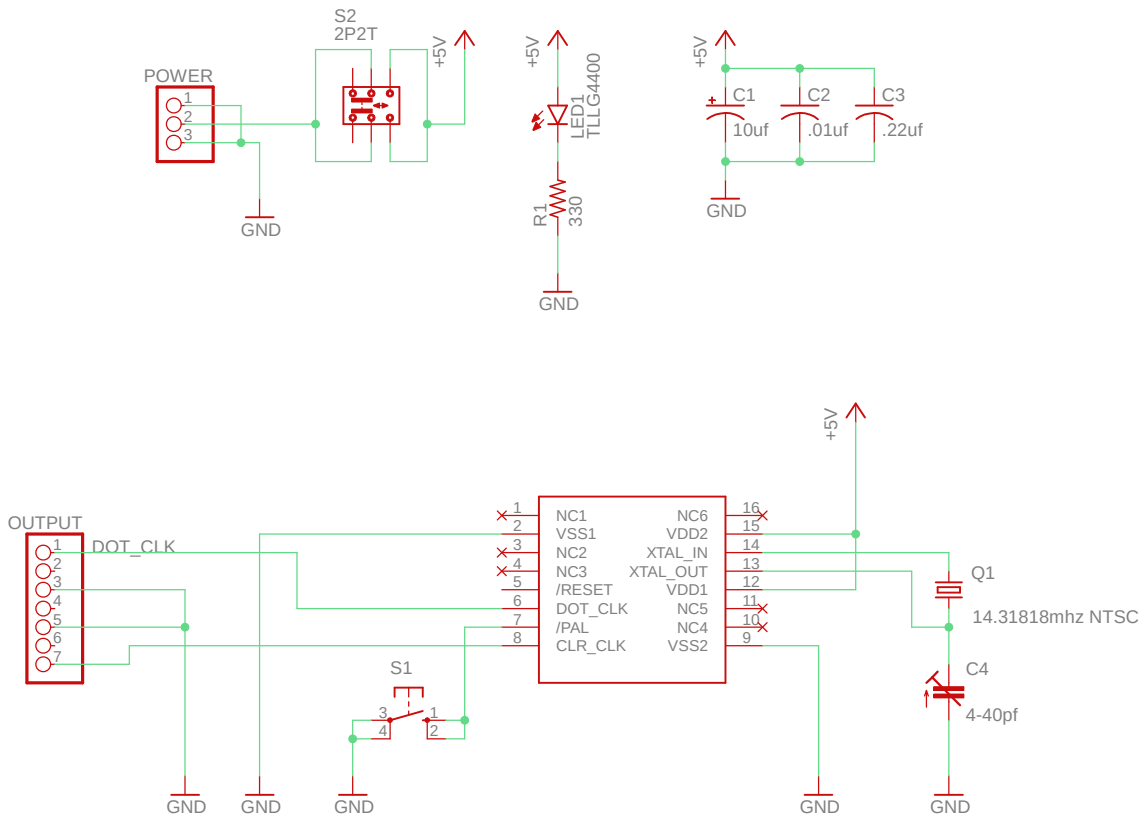

H1
MOUNT-HOLE3.2

H2
MOUNT-HOLE3.2

H3
MOUNT-HOLE3.2

H4
MOUNT-HOLE3.2

TITLE: MOS8701_HB Test Fixture v9	
Document Number:	REV:
Date: 8/16/2020 3:44 PM	Sheet: 1/1