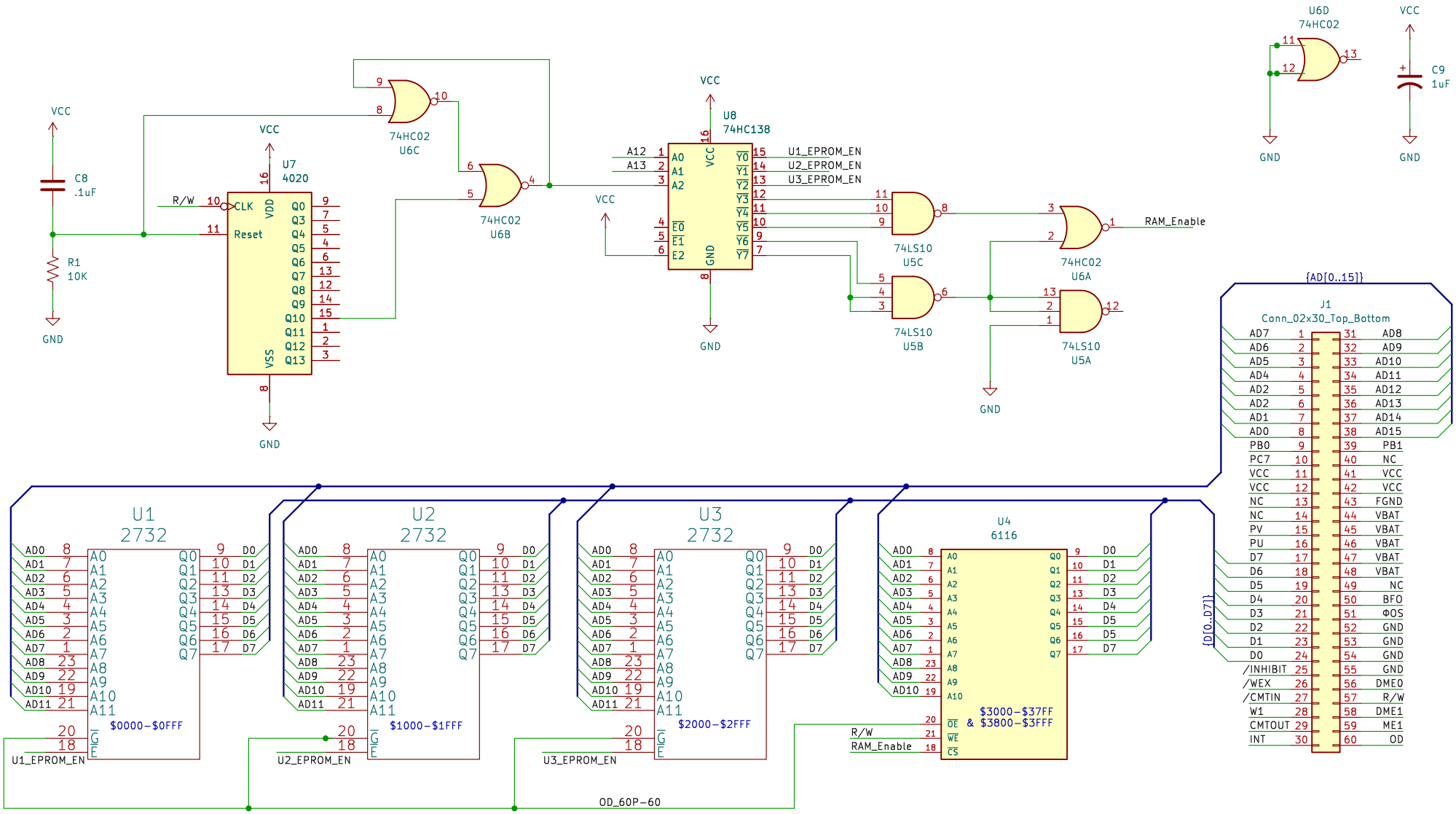

PC–1500 needs CE–151 (4K) Expansion (only)
PC–1500A does not need memory expansion

Sheet: 1/1
File: E–Valuator.kicad_sch

Title: E–Valuator ROM/RAM for Sharp PC–1500/A

Size: A4	Date: 15 April, 2026	Rev:
KiCad E.D.A. 9.0.3		Id: 1/1