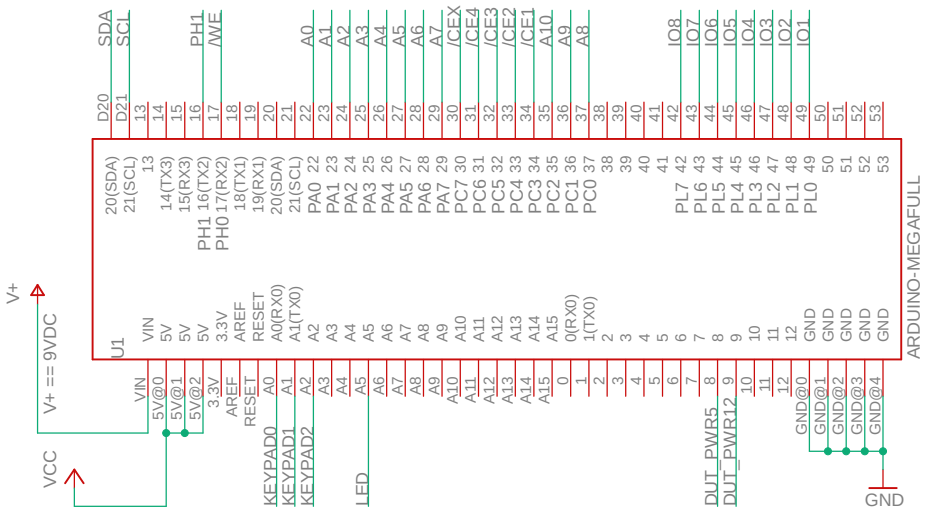

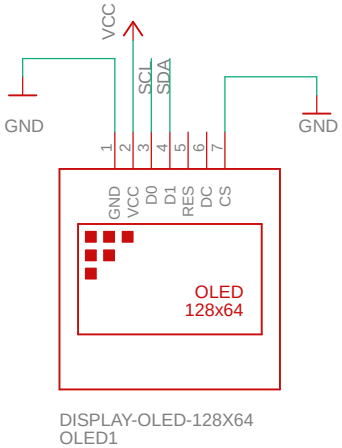

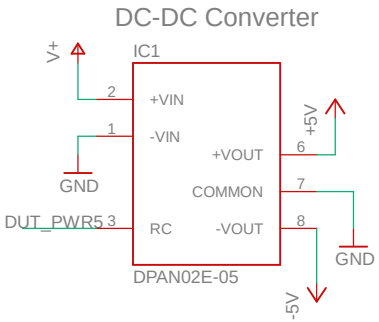

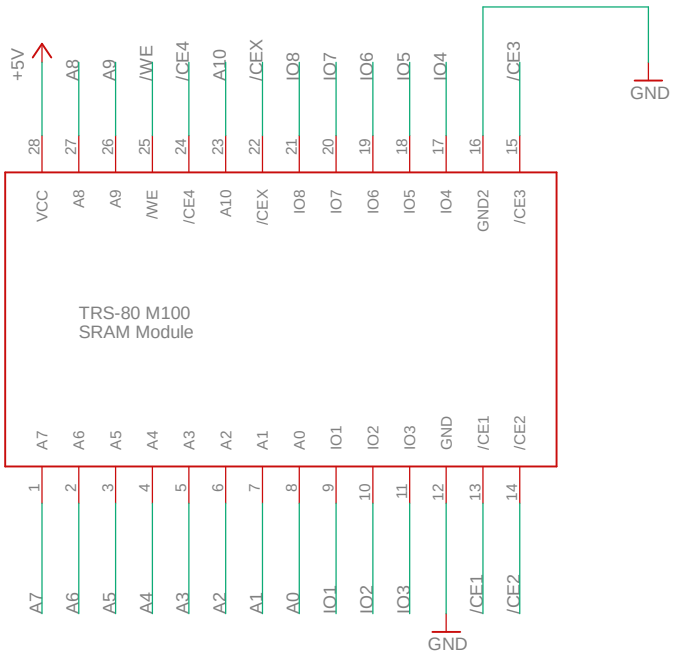

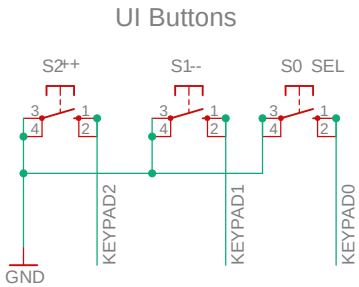

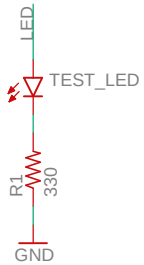

Arduino Mega SRAM Tester	Hey Birt!
TITLE: TRS80 M100 SRAM Module Tester	
Document Number:	REV: 1.0
Date: not saved!	Sheet: 1/1