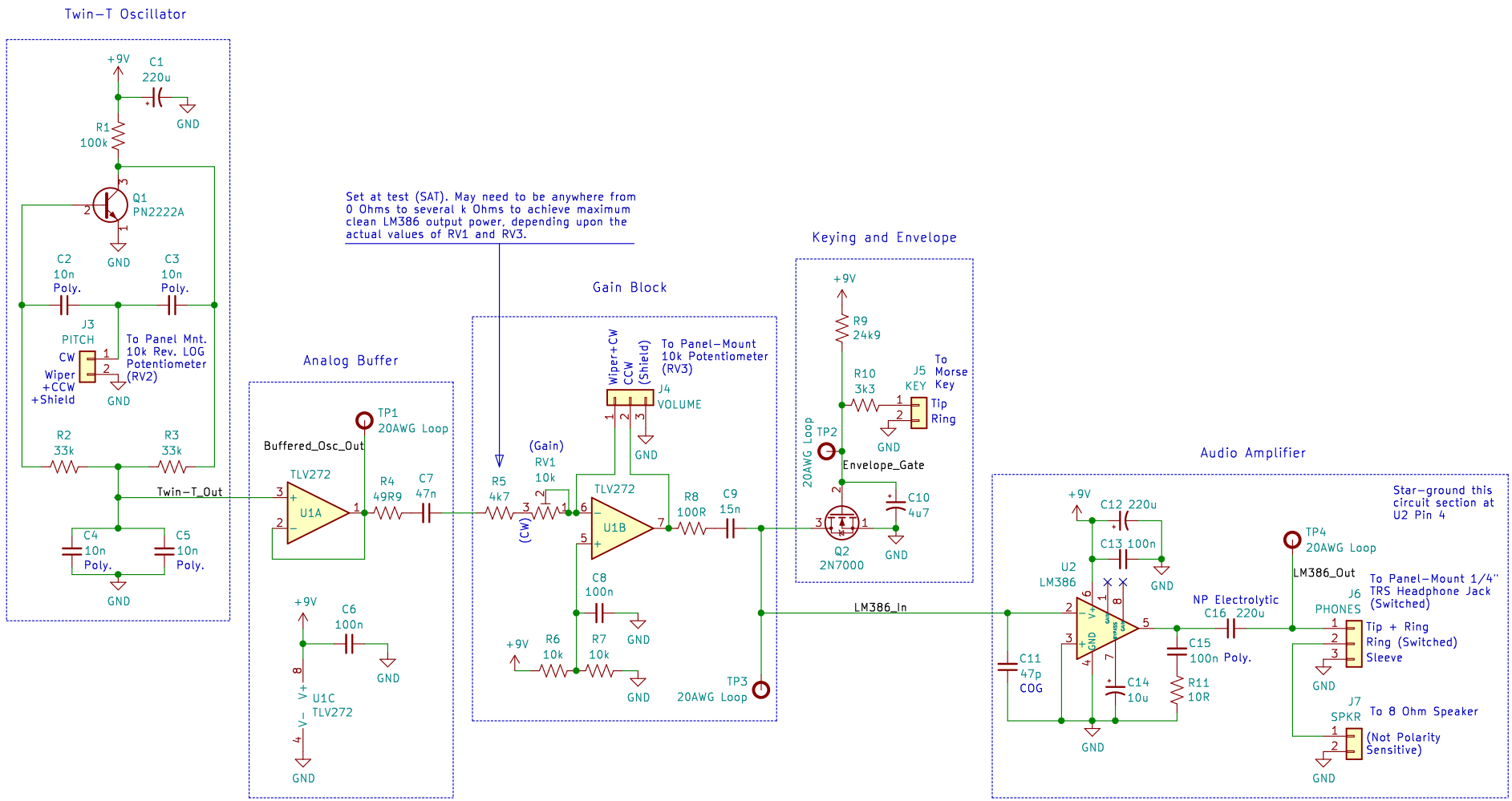

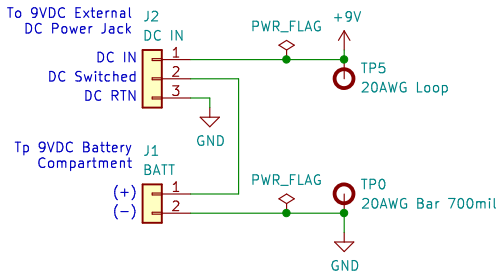

Based upon the circuit designed by Michael A. Maynard (K4ICY).
http://k4icy.com/weekend_radio_3tr-audio-amp.html

Bensen Engineering

https://github.com/JeffB-BE
https://www.youtube.com/channel/UCjZB0LE4ZC2Q2Tl3gbietnw

Sheet: /
File: Twin-T_Code_Practice_Oscillator.sch

Title: Twin-T Morse Code Practice Oscillator

Size: USLetter	Date: 2020-09-02	Rev: A
KiCad E.D.A. kicad (5.1.6)-1		Id: 1/1