Chap11 & Lab6: Hadoop Implementation

National Tsing Hua University

2019, Fall Semester

Outline

- Basic Hadoop Programming
  - Hadoop Classes
  - Mapper/Reducer
  - WordCount Example
- Hands-on Lab
  - HDFS/ MapReduce
  - Hive / Spark
- Advanced Hadoop Programming
  - Custom key & value types
  - Combiner/Partitioner
  - GroupingComparator/SortComparator
  - Secondarysort example

Hadoop Implementation

- Hadoop release 2.x
  - ***New version with YARN*** (resource manager)
  - Latest version is 2.8.2 (Oct. 2017)

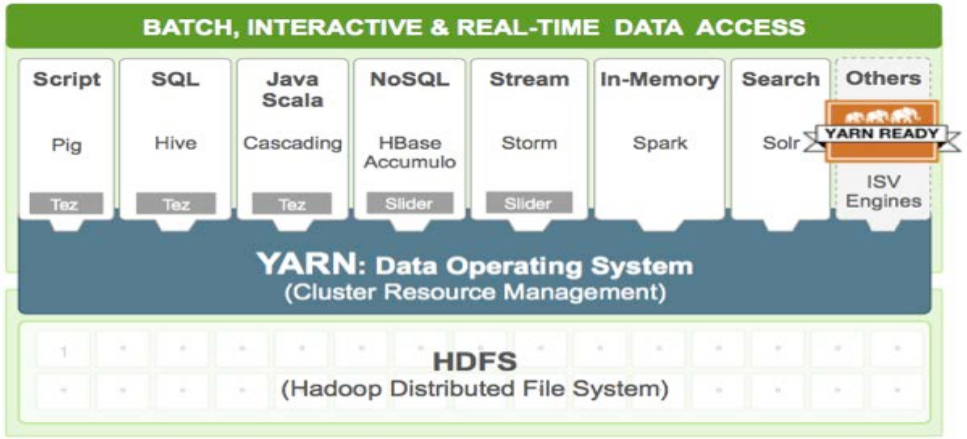

- Java Language
  - Based on **inheritance and interface**
- Official Tutorial
  - https://hadoop.apache.org/docs/current/hadoop-mapreduce-client/hadoop-mapreduce-client-core/MapReduceTutorial.html

Hadoop Runtime

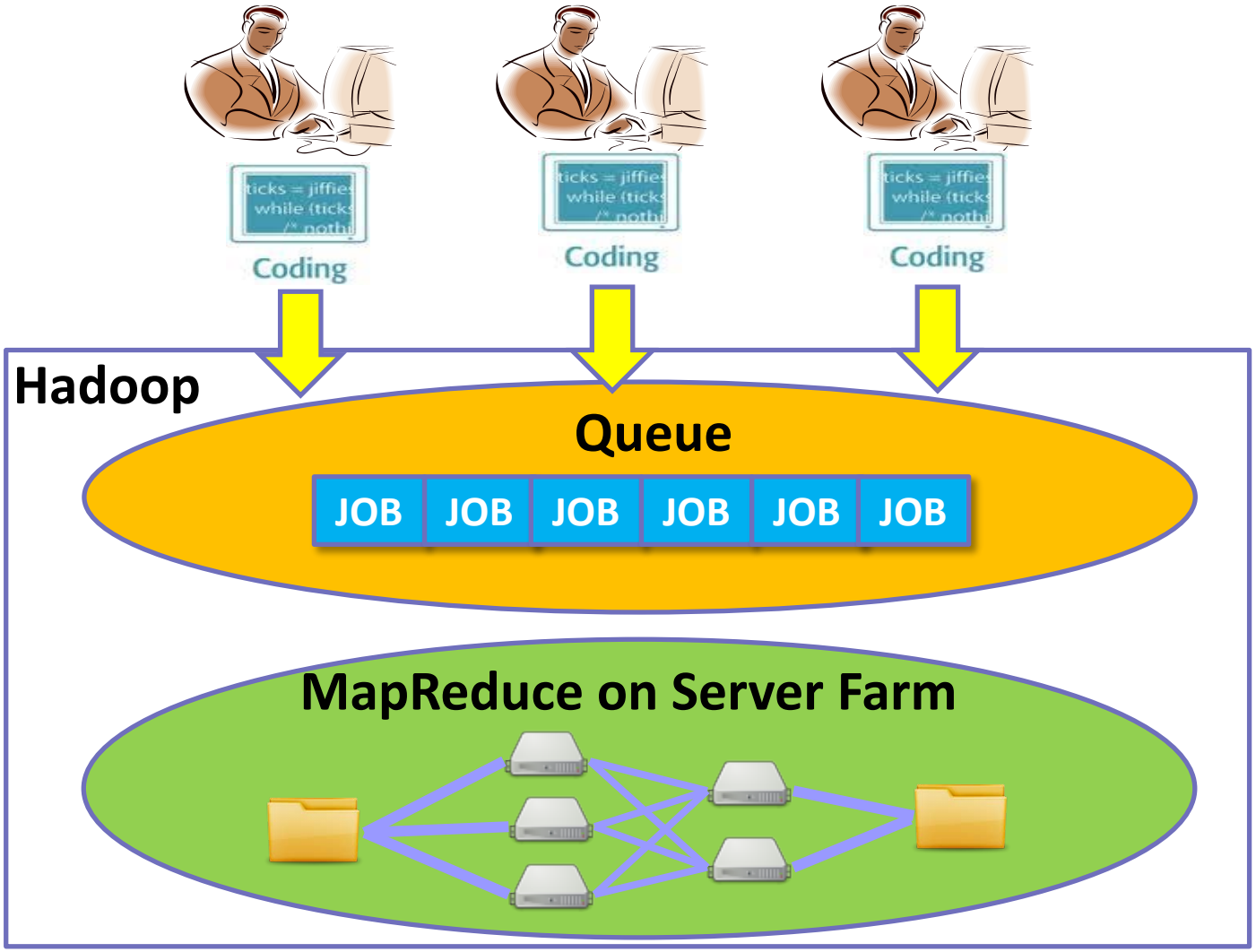

Import hadoop package

Import classes in "***org.apache.hadoop.mapreduce***" package

- **import java.io.IOException; import java.util.StringTokenizer;**
- **import org.apache.hadoop.conf.Configuration;**
- **import org.apache.hadoop.fs.Path;**
- **import org.apache.hadoop.io.IntWritable;**
- **import org.apache.hadoop.io.Text;**
- **import org.apache.hadoop.mapreduce.Job;**
- **import org.apache.hadoop.mapreduce.Mapper;**
- **import org.apache.hadoop.mapreduce.Reducer;**
- **import org.apache.hadoop.mapreduce.lib.input.FileInputFormat;**
- **Import org.apache.hadoop.mapreduce.lib.output.FileOutputFormat;**
- **[Other necessary classes called by your code ……]**

Notice:

- **"mapreduce" package it not interchangable with "mapred" package**
- **Prevent using "Deprecated" methods**

Main Hadoop Classes

- **Configureation**
  - Hadoop **cluster** configuration
- **Job**
  - the primary interface for a user to describe a map-reduce **job** to the Hadoop framework for execution
- **Mapper**
  - maps input <K,V> pairs to intermediate <K,V> pairs
- **Reducer**
  - reduces intermediate values to a smaller set of values
- **Partitioner**
  - partitions the key of intermediate <K,V> pairs to reducer
- **Combiner**
  - combine map-outputs <K,V> pairs before being sent to reducers
- **RecordReader/RecordWriter**
  - Read input file & write output file

Job Class

- configure a job
  - Specify the class for mapper, reducer, combiner, etc.
- submit the job
  - **Submit the job to the cluster and return immediately**
  - **Or submit the job to the cluster and wait for it to finish**
- control its execution
  - Set the number of max attempts to run a reduce or map task.
  - Set scheduling priority.
  - Kill the running job, or specific task.
  - Turn speculative execution on or off for this job.
- query its state.
  - Get the *progress* of the job's map-tasks or reduce-tasks (between 0 and 1).
  - Returns the current state of the Job.
  - Get start time of the job.
  - Check if the job completed successfully.

Job Creation & Submission

Method	Description
getInstance (**Configuration** conf, **String** jobName)	Creates a new job with a given jobName.
setJarByClass(**Class**<?> cls)	Set the Jar by finding where a given class came from.
submit()	Submit the job to the cluster and return immediately. (non-blocking call)
waitForCompletion(boolean verbose)	Submit the job to the cluster and wait for it to finish. (blocking call)

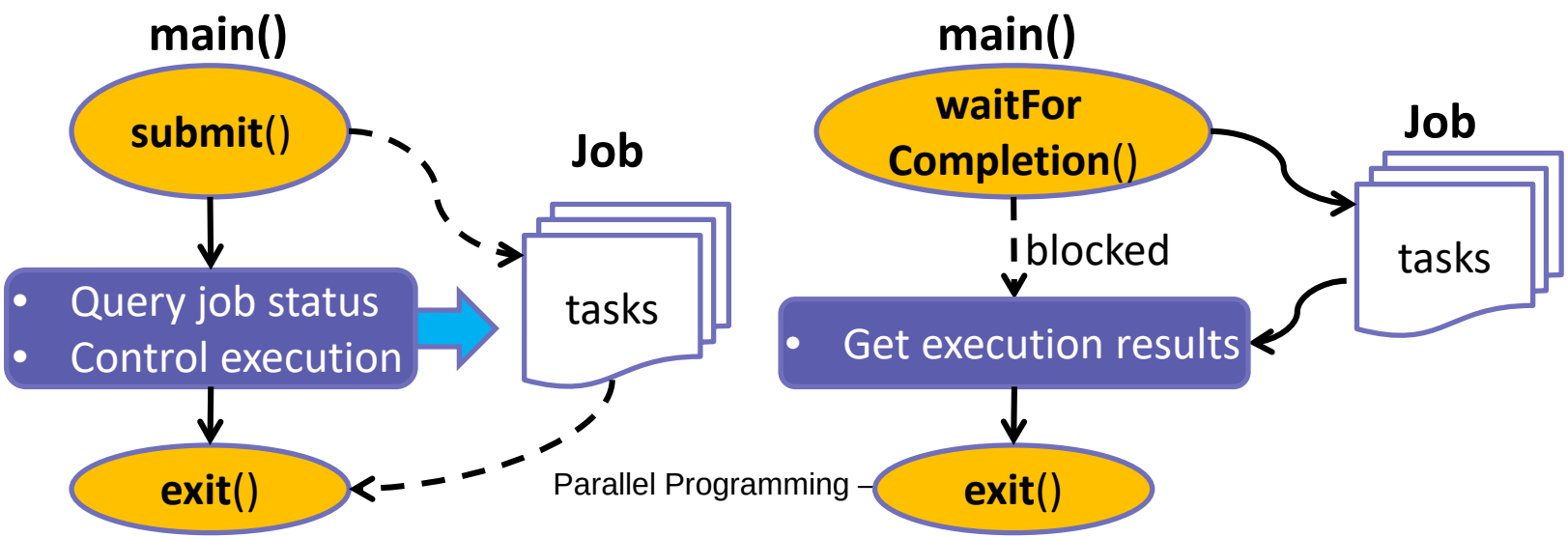

Query & Control Job Execution

Method	Description
getStartTime()	Get start time of the job.
getFinishTime()	Get finish time of the job.
getStatus()	Returns a JobStatus object contain all the current job state info
mapProgress() **reduceProgress**()	Get the *progress* of the job. , as a float between 0.0 and 1.0.
getCounters()	Gets the counters object for this job
isComplete()	Check if the job is finished or not.

Method	Description
setPriority(JobPriority prio)	High/Low/Normal/Very_High/Very_Low
setNumReduceTasks(int n)	Set the requisite number of reduce tasks for this job. (notice: no method for map tasks)
setSpeculativeExecution(boolean flag)	Turn speculative execution on or off for this job.
killJob()	Kill the running job.
killTask(**TaskAttemptID** taskId)	Kill indicated task attempt.

Example

```
public class WordCount {
    public static void main(String[] args) throws Exception {
        Configuration conf = new Configuration();
        Job job = Job.getInstance(conf, “wordcount”);
        job.setJarByClass(WordCount.class);
        job.waitForCompletion(true); // Submit the job and wait for it to finish
    }
}
```

```
public class WordCount {
    public static void main(String[] args) throws Exception {
        Configuration conf = new Configuration();
        Job job = Job.getInstance(conf, “wordcount”);
        job.setJarByClass(WordCount.class);
        job.submit(); // Submit the job and return immediately
        while(job. isComplete()==false) {
            System.out.println(mapProgress());
        }
    }
}
```

Job Configuration on Compute Functions

Method	Description
setMapperClass (Class<? extends Mapper>)	Set the Mapper class for the job
setReducerClass (Class<? extends Reducer>)	Set the Reducer class for the job.
setPartitionerClass (Class<? extends Partitioner>)	partition Mapper-outputs to be sent to the reducers
setCombinerClass (Class<? extends Reducer>)	combine map-outputs before being sent to the reducer It is an optional function during execution
setGroupingComparatorClass (Class<? extends RawComparator>)	Define the comparator that controls which keys are grouped together for a single call to reducer
setSortComparatorClass (Class<? extends RawComparator>)	Define the comparator that controls how the keys are sorted before they are passed to the reducer

Map Phase Steps

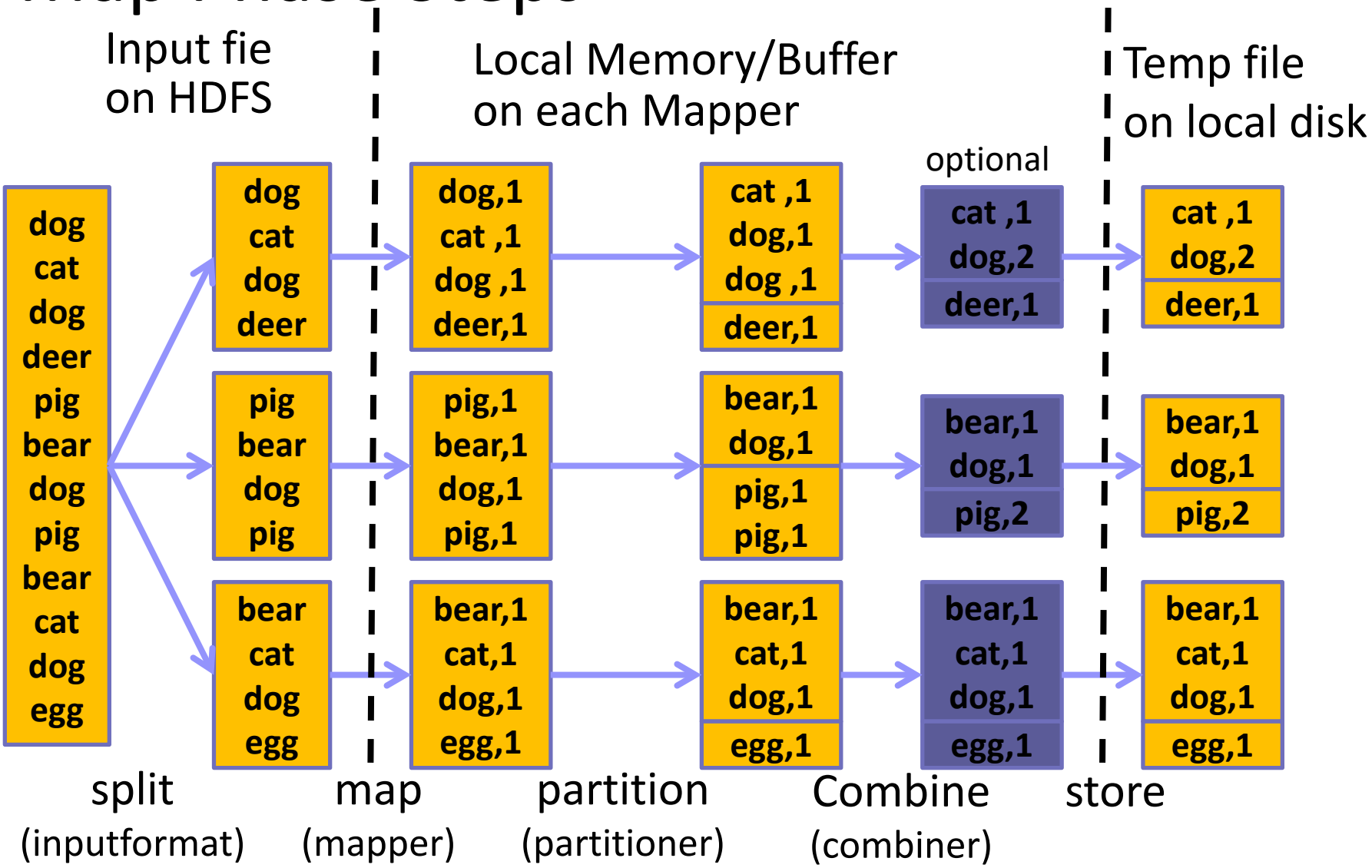

Reduce Phase Steps

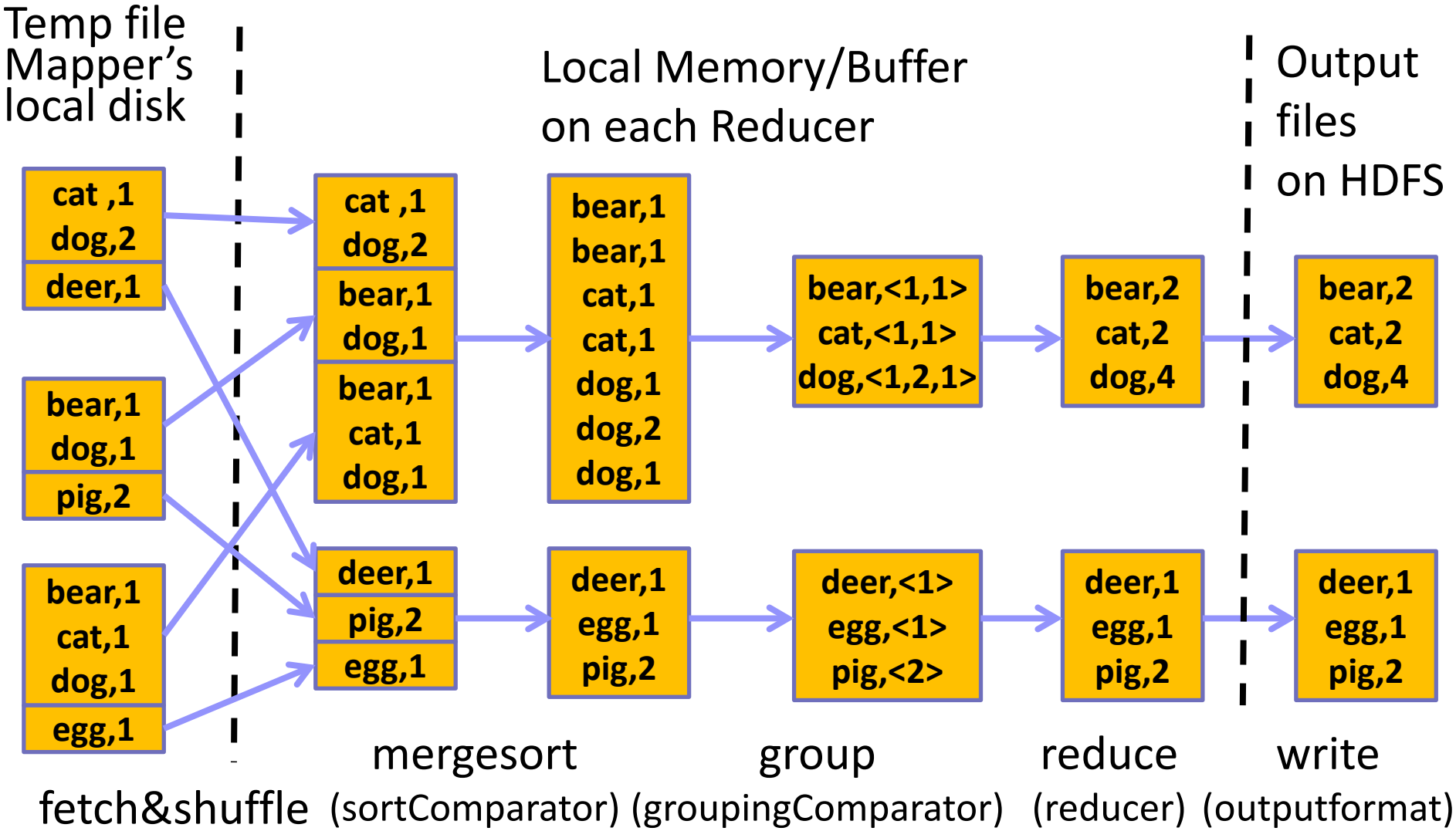

Job Configuration on Data Type

Method	Description
setInputFormatClass()	Set the InputFormat **implementation** for the job
setMapOutputKeyClass()	Set the key class for the map output data **Same type as final output if not specify**
setMapOutputValueClass()	Set the value class for the map output data **Same type as final output if not specify**
setOutputKeyClass()	Set the key class for the job output data
setOutputValueClass()	Set the value class for job outputs
setOutputFormatClass()	Set the OutputFormat **implementation** for the job

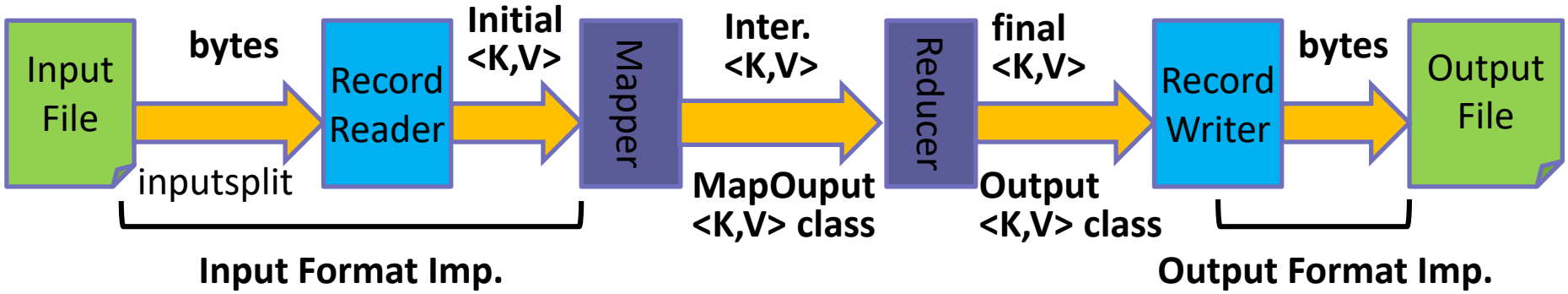

How many Map/Reduce Tasks?

- The number of map tasks is controlled by the implementation of **inputsplit** in **inputFormat**
  - Default is to split by the **block size of files in HDFS**
  - But it can also be overwritten to split differently
- The number of reduce tasks is controlled by the job configuration: job.setNumReduceTasks(int n)
  - The right number of reduces seems to be 0.95 or 1.75 multiplied by #reduce_slots
  - More reducer ➔ higher framework overhead, better load balancing and lowers failure cost.

Input/Output Format Class

- The MapReduce operates **exclusively** on <K, V> pairs
  - It views the job input as a set of <key, value> pairs and produces a set of <key, value> pairs as the output of the job
- InputFormat: parse input file into a set of <key, value>
  - **TextInputFormat**: Keys are the **position** in the file, and values are the **line of text**.
  - **KeyValueTextInputFormat:** Each line is divided into key and value parts by a **separator byte**. If no such a byte exists, the key will be the entire line and value will be empty.
- OutputFormat: write a set of <key, value> to output file
  - **TextOutputFormat**: writes plain text: key, value, and "\r\n".

Key-Value Pair Class

- Both ***key*** and ***value*** must implement *Writiable* interface
  - *A* serializable object which implements a simple, efficient, serialization protocol, based on **DataInput** and **DataOutput**
- ***Key*** also implements the interface of *WritableComparable*
  - Because key must be sorted by the framework
- Default supported types includes:
  - BooleanWritable, BytesWritable, DoubleWritable, FloatWritable, IntWritable, LongWritable, Text, NullWritable

WordCount: Main()

```
public static void main(String[] args) throws Exception {
    Configuration conf = new Configuration();
    Job job = Job.getInstance(conf, “world count”);
    job.setJarByClass(WordCount.class);

    job.setMapperClass(Tokenizer.class); // Tokennizer is the mapper function
    job.setCombiner(IntSum.class);
    job.setReducerClass(IntSum.class); // IntSum is the reducer function

    //FileInputFormat is the base class for all file-based InputFormats
    FileInputFormat.addInputPaths(job, new Path(args[0]));
    FileOutputFormat.addOutputPath(job, new Path(args[1]));

    job.setInputFormat(TextInputFormat.class); // inputs are texts
    job.setOutputFormat(TextOutputFormat.class); // outputs are texts

    job.setOutputKeyClass(Text.class); // intermediate and final key is text
    job.setOutputValueClass(IntWritable.class); // intermediate and final value is int

    job.waitForCompletion(true); // Submit the job and wait for it to finish
}
```

Mapper

- Mapper maps input key/value pairs to a set of intermediate key/value pairs
  - The transformed intermediate records do **NOT** need to be the same type as the input records.
  - A given input pair may map to **zero** or **many** output pairs.
- Each key/value pair is applied with a map function:
  - **map**(WritableComparable, Writable, Context)
  - **<WritableComparable, Writable>** are the input key-value pairs generated by the **InputFormat class**
  - **context.write(K, V)** collects output key-value pairs

Mapper

Input <K,V> type from InputFormat

Default <K,V> type for final output

```
public static class Tokenizer extends Mapper <Object, Text, Text, IntWritable> {
    private final static IntWritable one = new IntWritable(1);
    private Text word = new Text();
    public void map(Object key, Text value,  Context context)
                    throws IOException {
        String line = value.toString();
        StringTokenizer iter = new StringTokenizer(line);
        while (iter.hasMoreTokens()) {   // each line has multiple words
                    word.set(iter.nextToken());
                    context.write(word, one);
        }
    }
}
```

<K,V> must be private var to the class

Set the var value
Don't declare a new var here

```
main():
    job.setOutputKeyClass(Text.class);
    job.setOutputValueClass(IntWritable.class);
    job.setMapperClass(Tokenizer.class);
    job.setInputFormat(TextInputFormat.class);
```

Reducer

- Reducer reduces a set of intermediate values which share a key to a smaller set of values.
  - The transformed intermediate records do **NOT** need to be the same type as the input records.
  - A given input pair may map to **zero** or **many** output pairs.
- Each **group** of (K,V) pair applied with a reduce func:
  - reduce(WritableComparable, **Iterator<**Writable**>**, Context)
  - **WritableComparable** is the input key-value pairs generated by the **mapper class**
  - **Iterator<**Writable**>** is the **list of values grouped by the same key**
  - **context.write(K, V)** collects output key-value pairs

Reducer

Output <K,V> type

```
public static class IntSum extends
        Reducer<Text, IntWritable, Text, IntWritable>
{
    private IntWritable result = new IntWritable();
    public void reduce(Text key, Iterator<IntWritable> values,
        Context context) throws IOException, InterruptedException
    {
      int sum = 0;
      while (values.hasNext())  sum += values.next().get();
      result.set(sum);
      context.write(key, result);
    }
}
```

Set the var value
Don't declare a new var here

```
main():
    job.setOutputKeyClass(Text.class);
    job.setOutputValueClass(IntWritable.class);
    job.setReducerClass(IntSum.class);
    job.setOutputFormat(TextInputFormat.class);
```

Outline

- Basic Hadoop Programming
  - Hadoop Classes
  - Mapper/Reducer
  - WordCount Example
- Hands-on Lab
  - HDFS/ MapReduce
  - Hive / Spark
- Advanced Hadoop Programming
  - Custom key & value types
  - Combiner/Partitioner
  - GroupingComparator/SortComparator
  - Secondarysort example

Hands-on Lab

- SSH login to our Hadoop cluster
  - Access info has just sent to your ilms email

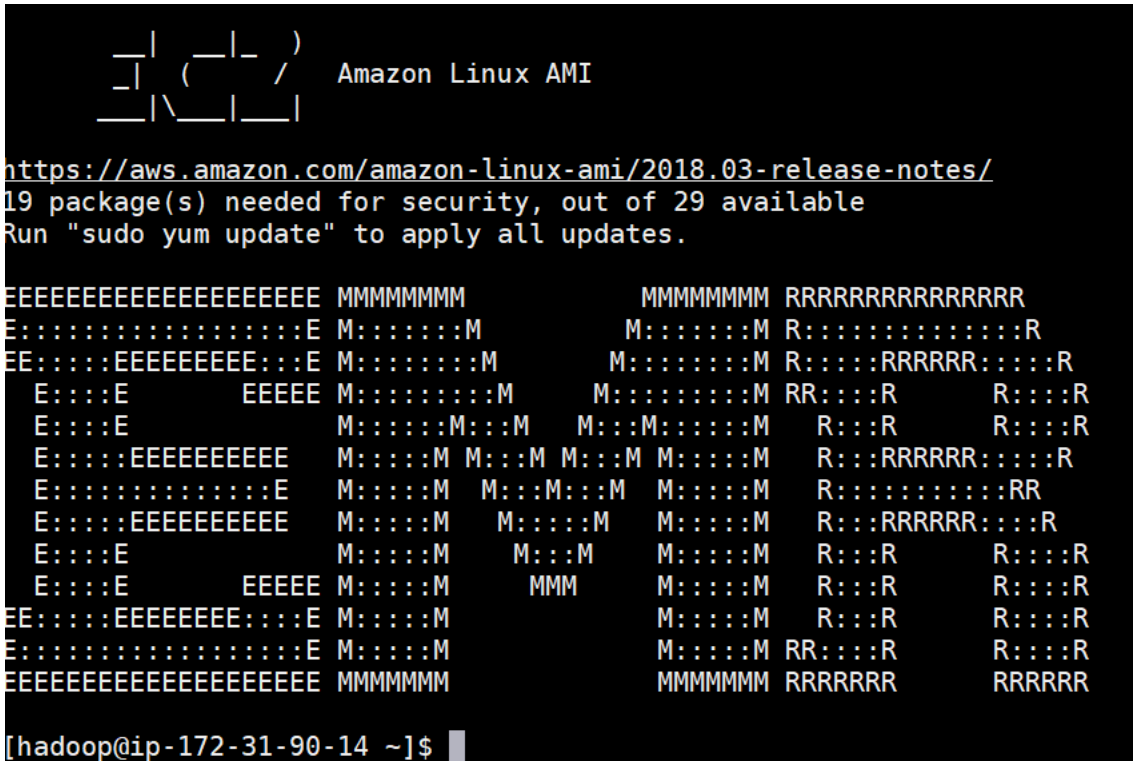

Basic HDFS Commands

Command	Description
-ls <args>	List directory
-mkdir <paths>	Create a directory
-put <localsrc> <HDFS_dest_Path>	Upload files
-get <hdfs_src> <localdst>	Download file
-cat <path[filename]>	See content of files
-cp <source> <dest>	Copy files in HDFS
-rm <arg>	Remove files or directories
-tail <path[filename]>	Display last few lines of a file
-getmerge [hdfs_src_dir] [hdfs_dst_file]	Merge files (from reducers)

- $hadoop fs [command]
- Ref: https://hadoop.apache.org/docs/r2.7.1/hadoop-project-dist/hadoop-common/FileSystemShell.html

Steps to Prepare Input Files

- Copy files to your home directory & switch to the dir

```
$ cp -R /home/hadoop/lab .
$ cd lab
```

- Create your own folder on HDFS:

```
$ hadoop fs -mkdir /user/hadoop/[username]
```

- Copy input test files from local file system to your HDFS

```
$ hadoop fs -put input /user/hadoop/[username]/
```

- List the input files on HDFS

```
$ hadoop fs -ls /user/hadoop/[username]/input/
```

Steps to Prepare Input Files

```
-rw-r--r--   1 jchou hadoop     144860 2019-12-06 17:24 /user/hadoop/123456/input/shakespeare-first-51.txt
-rw-r--r--   1 jchou hadoop     182399 2019-12-06 17:24 /user/hadoop/123456/input/shakespeare-hamlet-25.txt
-rw-r--r--   1 jchou hadoop     117902 2019-12-06 17:24 /user/hadoop/123456/input/shakespeare-julius-26.txt
-rw-r--r--   1 jchou hadoop     157094 2019-12-06 17:24 /user/hadoop/123456/input/shakespeare-king-45.txt
-rw-r--r--   1 jchou hadoop     154933 2019-12-06 17:24 /user/hadoop/123456/input/shakespeare-life-54.txt
-rw-r--r--   1 jchou hadoop     148351 2019-12-06 17:24 /user/hadoop/123456/input/shakespeare-life-55.txt
-rw-r--r--   1 jchou hadoop     122448 2019-12-06 17:24 /user/hadoop/123456/input/shakespeare-life-56.txt
-rw-r--r--   1 jchou hadoop      14364 2019-12-06 17:24 /user/hadoop/123456/input/shakespeare-lovers-62.txt
-rw-r--r--   1 jchou hadoop     129916 2019-12-06 17:24 /user/hadoop/123456/input/shakespeare-loves-8.txt
-rw-r--r--   1 jchou hadoop     105202 2019-12-06 17:24 /user/hadoop/123456/input/shakespeare-macbeth-46.txt
-rw-r--r--   1 jchou hadoop     130363 2019-12-06 17:24 /user/hadoop/123456/input/shakespeare-measure-13.txt
-rw-r--r--   1 jchou hadoop     122508 2019-12-06 17:24 /user/hadoop/123456/input/shakespeare-merchant-5.txt
-rw-r--r--   1 jchou hadoop     131401 2019-12-06 17:24 /user/hadoop/123456/input/shakespeare-merry-15.txt
-rw-r--r--   1 jchou hadoop      96439 2019-12-06 17:24 /user/hadoop/123456/input/shakespeare-midsummer-16.txt
-rw-r--r--   1 jchou hadoop     123284 2019-12-06 17:24 /user/hadoop/123456/input/shakespeare-much-3.txt
-rw-r--r--   1 jchou hadoop     156338 2019-12-06 17:24 /user/hadoop/123456/input/shakespeare-othello-47.txt
-rw-r--r--   1 jchou hadoop     111421 2019-12-06 17:24 /user/hadoop/123456/input/shakespeare-pericles-21.txt
-rw-r--r--   1 jchou hadoop      84687 2019-12-06 17:24 /user/hadoop/123456/input/shakespeare-rape-61.txt
-rw-r--r--   1 jchou hadoop     144138 2019-12-06 17:24 /user/hadoop/123456/input/shakespeare-romeo-48.txt
-rw-r--r--   1 jchou hadoop     157146 2019-12-06 17:24 /user/hadoop/123456/input/shakespeare-second-52.txt
-rw-r--r--   1 jchou hadoop      95659 2019-12-06 17:24 /user/hadoop/123456/input/shakespeare-sonnets-59.txt
-rw-r--r--   1 jchou hadoop     124128 2019-12-06 17:24 /user/hadoop/123456/input/shakespeare-taming-2.txt
-rw-r--r--   1 jchou hadoop      99303 2019-12-06 17:24 /user/hadoop/123456/input/shakespeare-tempest-4.txt
-rw-r--r--   1 jchou hadoop     148008 2019-12-06 17:24 /user/hadoop/123456/input/shakespeare-third-53.txt
-rw-r--r--   1 jchou hadoop     113037 2019-12-06 17:24 /user/hadoop/123456/input/shakespeare-timon-49.txt
-rw-r--r--   1 jchou hadoop     123897 2019-12-06 17:24 /user/hadoop/123456/input/shakespeare-titus-50.txt
-rw-r--r--   1 jchou hadoop     134743 2019-12-06 17:24 /user/hadoop/123456/input/shakespeare-tragedy-57.txt
-rw-r--r--   1 jchou hadoop     180293 2019-12-06 17:24 /user/hadoop/123456/input/shakespeare-tragedy-58.txt
-rw-r--r--   1 jchou hadoop     158763 2019-12-06 17:24 /user/hadoop/123456/input/shakespeare-troilus-22.txt
-rw-r--r--   1 jchou hadoop     116626 2019-12-06 17:24 /user/hadoop/123456/input/shakespeare-twelfth-20.txt
-rw-r--r--   1 jchou hadoop     101862 2019-12-06 17:24 /user/hadoop/123456/input/shakespeare-two-18.txt
-rw-r--r--   1 jchou hadoop      54386 2019-12-06 17:24 /user/hadoop/123456/input/shakespeare-venus-60.txt
-rw-r--r--   1 jchou hadoop     145677 2019-12-06 17:24 /user/hadoop/123456/input/shakespeare-winters-19.txt
```

Steps to Compile & Run Jobs

- Compile the Hadoop java files

```
$ javac -classpath `hadoop classpath` WordCount.java -d bin
```

- Create a jar file for the executable

```
$ jar -cvf WordCount.jar -C bin .
```

- Remove the output folder on HDFS

```
$ hadoop fs -rm -R /user/hadoop/[username]/output
```

- Run the Hadoop job

```
$ hadoop jar WordCount.jar org.myorg.WordCount
/user/hadoop/[username]/input
/user/hadoop/[username]/output
```

Steps to Compile & Run Jobs

```
19/12/06 17:26:46 INFO mapreduce.Job:  map 70% reduce 7%
19/12/06 17:26:49 INFO mapreduce.Job:  map 73% reduce 7%
19/12/06 17:26:50 INFO mapreduce.Job:  map 73% reduce 8%
19/12/06 17:26:51 INFO mapreduce.Job:  map 75% reduce 8%
19/12/06 17:26:52 INFO mapreduce.Job:  map 77% reduce 8%
19/12/06 17:26:53 INFO mapreduce.Job:  map 80% reduce 8%
19/12/06 17:26:56 INFO mapreduce.Job:  map 82% reduce 9%
19/12/06 17:26:58 INFO mapreduce.Job:  map 85% reduce 9%
19/12/06 17:26:59 INFO mapreduce.Job:  map 88% reduce 9%
19/12/06 17:27:00 INFO mapreduce.Job:  map 90% reduce 9%
19/12/06 17:27:02 INFO mapreduce.Job:  map 90% reduce 10%
19/12/06 17:27:03 INFO mapreduce.Job:  map 93% reduce 10%
19/12/06 17:27:05 INFO mapreduce.Job:  map 95% reduce 10%
19/12/06 17:27:06 INFO mapreduce.Job:  map 100% reduce 10%
19/12/06 17:27:08 INFO mapreduce.Job:  map 100% reduce 33%
19/12/06 17:27:10 INFO mapreduce.Job:  map 100% reduce 67%
19/12/06 17:27:11 INFO mapreduce.Job:  map 100% reduce 100%
19/12/06 17:27:12 INFO mapreduce.Job: Job job_1575649265022_0005 completed successfully
19/12/06 17:27:12 INFO mapreduce.Job: Counters: 51
        File System Counters
                FILE: Number of bytes read=1009048
                FILE: Number of bytes written=10539504
                FILE: Number of read operations=0
                FILE: Number of large read operations=0
                FILE: Number of write operations=0
                HDFS: Number of bytes read=4978889
```

Steps to Check Output Results

- Show the content of the output files on HDFS

```
$ hadoop fs -ls /user/hadoop/[username]/output
$ hadoop fs -cat /user/hadoop/[username]/output/part-r-00002
```

- Merge & get the output files to local file system

```
$ hadoop fs -getmerge /user/hadoop/[username]/output output.txt
```

- Show the content of the output files to TA

```
$ tail output.txt
```

Hadoop Job Log

- Dump output log:

```
$ yarn logs -applicationId [your_app_ID]
```

```
19/12/06 17:41:10 INFO client.RMProxy: Connecting to ResourceManager at ip-172-31-57-147.ec2.internal/172.31.57.147:8032
                Total committed heap usage (bytes)=461373440
        File Input Format Counters
                Bytes Read=122508
2019-12-06 17:39:36,418 INFO [main] org.apache.hadoop.metrics2.impl.MetricsSystemImpl: Stopping MapTask metrics system...
2019-12-06 17:39:36,418 INFO [ganglia] org.apache.hadoop.metrics2.impl.MetricsSinkAdapter: ganglia thread interrupted.
2019-12-06 17:39:36,419 INFO [cloudwatch] org.apache.hadoop.metrics2.impl.MetricsSinkAdapter: cloudwatch thread interrupted.
2019-12-06 17:39:36,419 INFO [main] org.apache.hadoop.metrics2.impl.MetricsSystemImpl: MapTask metrics system stopped.
2019-12-06 17:39:36,419 INFO [main] org.apache.hadoop.metrics2.impl.MetricsSystemImpl: MapTask metrics system shutdown complete
.
End of LogType:syslog
```

- Kill Hadoop job:

```
$ yarn application -kill [your_app_ID]
```

- Get a list of all applications:

```
$ yarn application -list
```

Hadoop Web UI

- Cluster Hadoop Status
  - http://[Hadoop Master IP]:50070
- MapReduce Job Tracker
  - http://[Hadoop Master IP]:8088
- Job History Server
  - http://[Hadoop Master IP]:19888

Cluster Hadoop Status

- Browser HDFS on web console (port:50070)

Hadoop | Overview | Datanodes | Datanode Volume Failures | Snapshot | Startup Progress | Utilities

Overview 'apollo31:9000' (active)

Started:	Fri Apr 27 11:45:04 +0800 2018
Version:	2.9.0, r756ebc8394e473ac25feac05fa493f6d612e6c50
Compiled:	Tue Nov 14 07:15:00 +0800 2017 by arsuresh from branch-2.9.0
Cluster ID:	CID-8c667c4c-a58b-41ef-bba5-4dce9296e20e
Block Pool ID:	BP-1793204651-10.88.88.31-1512724516979

Summary

Security is off.

Safemode is off.

533,892 files and directories, 525,110 blocks = 1,059,002 total filesystem object(s).

Heap Memory used 278.74 MB of 705 MB Heap Memory. Max Heap Memory is 889 MB.

Non Heap Memory used 63.8 MB of 65.06 MB Commited Non Heap Memory. Max Non Heap Memory is <unbounded>.

Cluster Hadoop Status

- Browser HDFS on web console (port:50070)

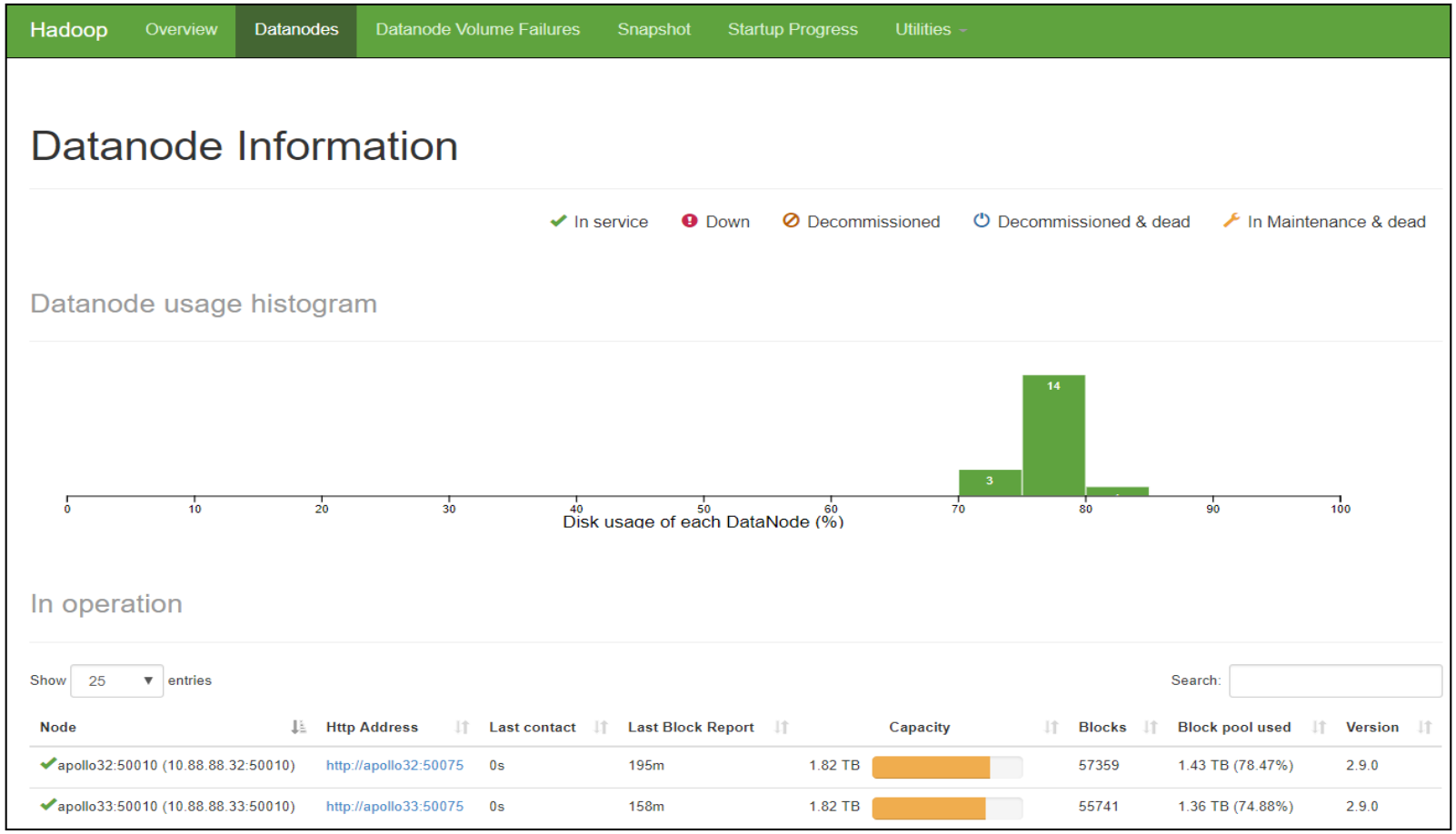

Cluster Hadoop Status

- Browser HDFS on web console (port:50070)

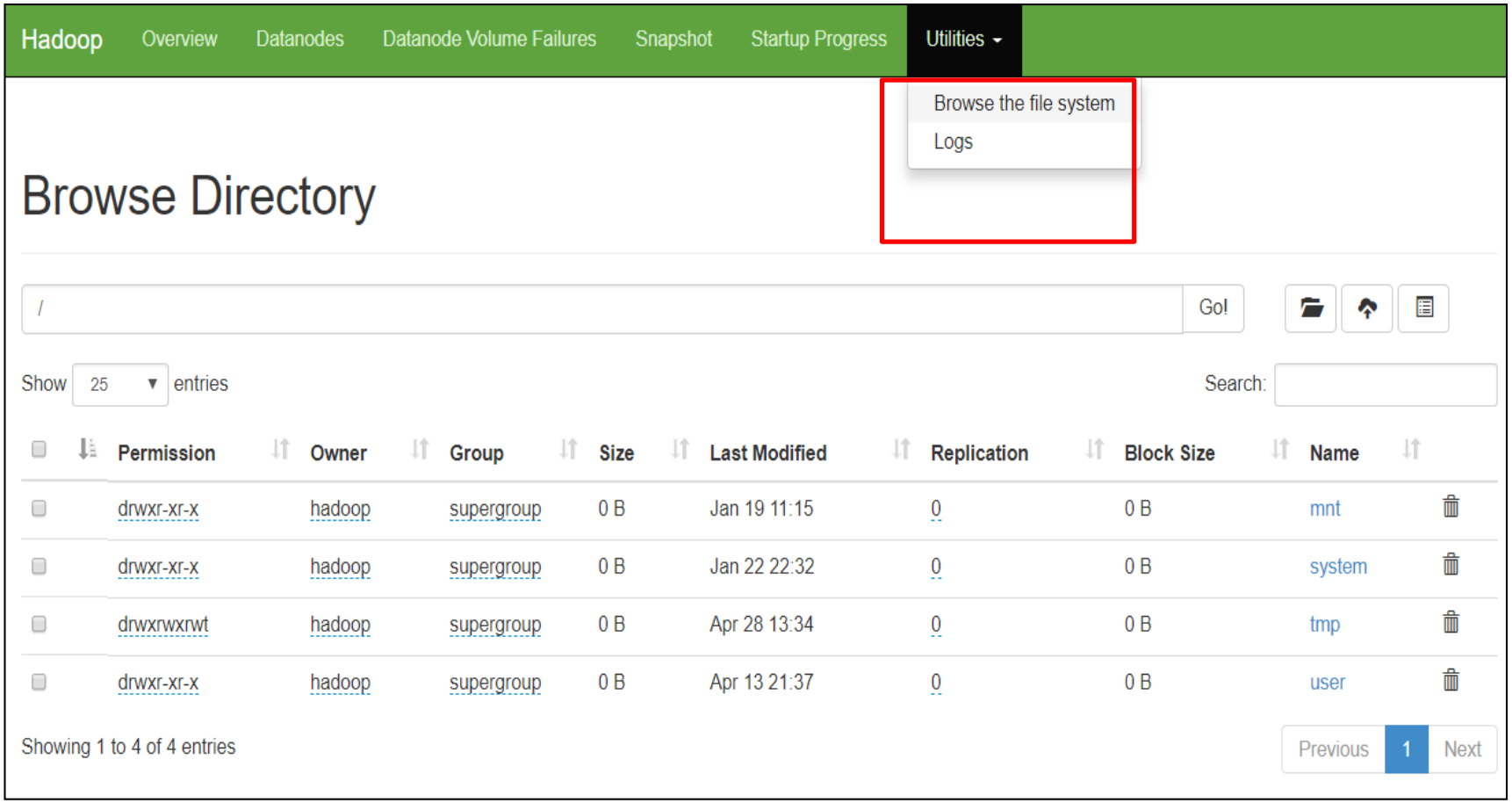

Job Tracker

- Browser all the job execution status (port:8088)

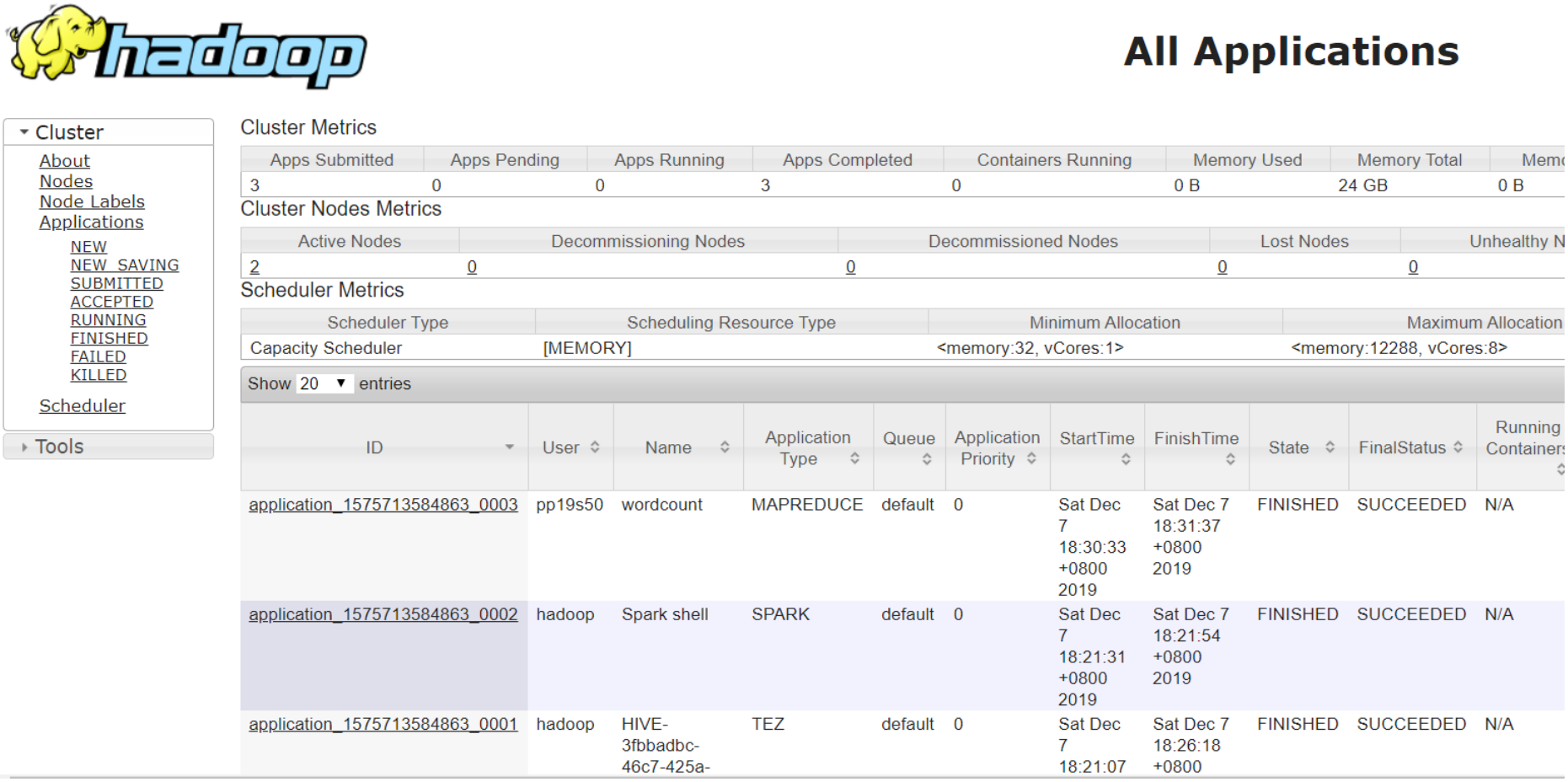

hadoop

All Applications

- Cluster
  - About
  - Nodes
  - Node Labels
  - Applications
    - NEW
    - NEW_SAVING
    - SUBMITTED
    - ACCEPTED
    - RUNNING
    - FINISHED
    - FAILED
    - KILLED
  - Scheduler
- Tools

Cluster Metrics

Apps Submitted	Apps Pending	Apps Running	Apps Completed	Containers Running	Memory Used	Memory Total	Memo
3	0	0	3	0	0 B	24 GB	0 B

Cluster Nodes Metrics

Active Nodes	Decommissioning Nodes	Decommissioned Nodes	Lost Nodes	Unhealthy N
2	0	0	0	0

Scheduler Metrics

Scheduler Type	Scheduling Resource Type	Minimum Allocation	Maximum Allocation
Capacity Scheduler	[MEMORY]	<memory:32, vCores:1>	<memory:12288, vCores:8>

Show 20 entries

ID	User	Name	Application Type	Queue	Application Priority	StartTime	FinishTime	State	FinalStatus	Running Containers
application_1575713584863_0003	pp19s50	wordcount	MAPREDUCE	default	0	Sat Dec 7 18:30:33 +0800 2019	Sat Dec 7 18:31:37 +0800 2019	FINISHED	SUCCEEDED	N/A
application_1575713584863_0002	hadoop	Spark shell	SPARK	default	0	Sat Dec 7 18:21:31 +0800 2019	Sat Dec 7 18:21:54 +0800 2019	FINISHED	SUCCEEDED	N/A
application_1575713584863_0001	hadoop	HIVE-3fbbadbc-46c7-425a-	TEZ	default	0	Sat Dec 7 18:21:07	Sat Dec 7 18:26:18 +0800	FINISHED	SUCCEEDED	N/A

Job History Server

- Browser job history (port:19888)

Job History Server

- Check the log file in cluster mode
  - Access Job History Server

1

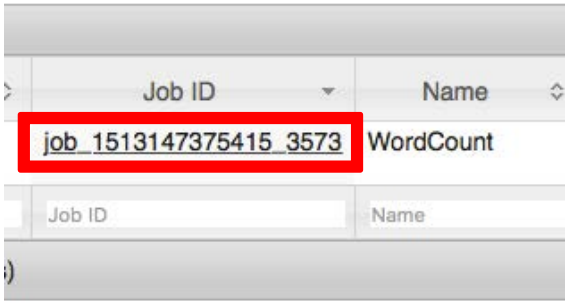

2

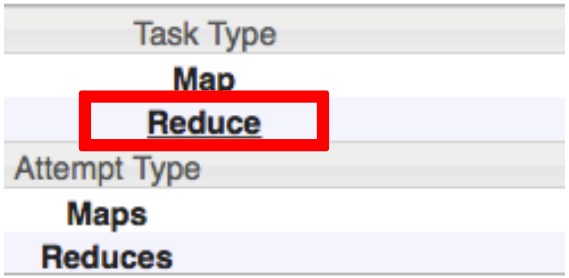

3

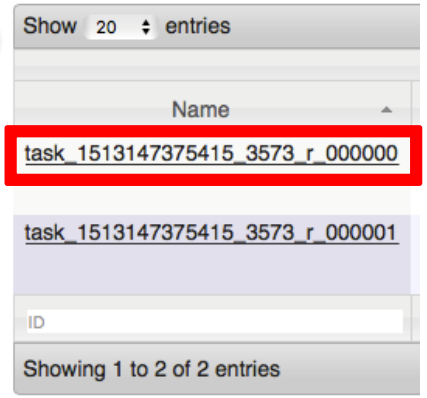

4

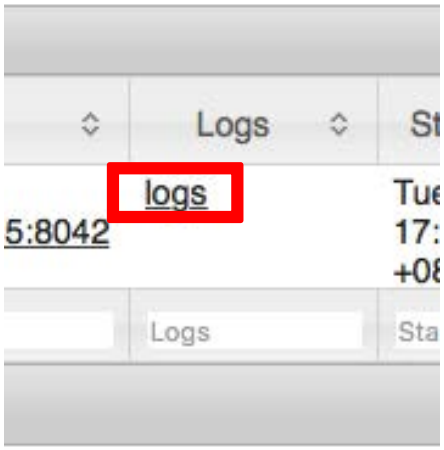

5

```
Log Type: prelaunch.err
Log Upload Time: Tue Dec 26 17:02:45 +0800 2017
Log Length: 0

Log Type: prelaunch.out
Log Upload Time: Tue Dec 26 17:02:45 +0800 2017
Log Length: 70
Setting up env variables
Setting up job resources
Launching container

Log Type: stderr
Log Upload Time: Tue Dec 26 17:02:45 +0800 2017
Log Length: 0

Log Type: stdout
Log Upload Time: Tue Dec 26 17:02:45 +0800 2017
Log Length: 333
Hadoop!!
Hadoop!!
```

Cheat Sheet Hive for SQL Users

- Complete reference: http://tw.gitbook.net/hive/index.html
- http://hortonworks.com/wp-content/uploads/2016/05/Hortonworks.CheatSheet.SQLtoHive.pdf

Function	MySQL	HiveQL
Retrieving information	SELECT from_columns FROM table WHERE conditions;	SELECT from_columns FROM table WHERE conditions;
All values	SELECT * FROM table;	SELECT * FROM table;
Some values	SELECT * FROM table WHERE rec_name = "value";	SELECT * FROM table WHERE rec_name = "value";
Multiple criteria	SELECT * FROM table WHERE rec1="value1" AND rec2="value2";	SELECT * FROM TABLE WHERE rec1 = "value1" AND rec2 = "value2";
Selecting specific columns	SELECT column_name FROM table;	SELECT column_name FROM table;
Retrieving unique output records	SELECT DISTINCT column_name FROM table;	SELECT DISTINCT column_name FROM table;
Sorting	SELECT col1, col2 FROM table ORDER BY col2;	SELECT col1, col2 FROM table ORDER BY col2;
Sorting backward	SELECT col1, col2 FROM table ORDER BY col2 DESC;	SELECT col1, col2 FROM table ORDER BY col2 DESC;
Counting rows	SELECT COUNT(*) FROM table;	SELECT COUNT(*) FROM table;
Grouping with counting	SELECT owner, COUNT(*) FROM table GROUP BY owner;	SELECT owner, COUNT(*) FROM table GROUP BY owner;
Maximum value	SELECT MAX(col_name) AS label FROM table;	SELECT MAX(col_name) AS label FROM table;
Selecting from multiple tables (Join same table using alias w/"AS")	SELECT pet.name, comment FROM pet, event WHERE pet.name = event.name;	SELECT pet.name, comment FROM pet JOIN event ON (pet.name = event.name);

Hands-on Lab: Hive

- Run in Hive SHELL

```
$ hive
```

- Create a database named by your studentID

```
hive> CREATE DATABASE test_[username];
```

- Create a table named “exam” under your DB with the following schema: id(int), name(string), score(int)

```
hive> CREATE TABLE test_[username].exam (id int, name string, score int)
ROW FORMAT DELIMITED FIELDS TERMINATED BY '\t'
```

- Load data to the table from filepath ‘/home/hive/sample.txt’

```
hive> LOAD DATA LOCAL INPATH '/home/[username]/lab7/hive/sample.txt'
OVERWRITE INTO TABLE test_[username].exam;
```

- Show all the content in table

```
hive> SELECT * from test_[username].exam;
```

Hands-on Lab: Hive

- Compute the average score from the table

```
hive> SELECT avg(score) from test_[username].exam;
```

```
Query ID = jchou_20191206171640_e0a851e3-8854-4197-89b2-c723f3eabfce
Total jobs = 1
Launching Job 1 out of 1
Tez session was closed. Reopening...
Session re-established.
Status: Running (Executing on YARN cluster with App id application_1575649265022_0004)

--------------------------------------------------------------------------------
        VERTICES      MODE        STATUS  TOTAL  COMPLETED  RUNNING  PENDING  FAILED  KILLED
--------------------------------------------------------------------------------
Map 1 .......... container     SUCCEEDED      1          1        0        0       0       0
Reducer 2 ...... container     SUCCEEDED      1          1        0        0       0       0
--------------------------------------------------------------------------------
VERTICES: 02/02  [==========================>>] 100%  ELAPSED TIME: 5.05 s
--------------------------------------------------------------------------------
OK
81.66666666666667
Time taken: 11.068 seconds, Fetched: 1 row(s)
```

Hands-on Lab

- SSH login to our Spark cluster
  - Access info has just sent to your ilms email

```
       __|  __|_  )
       _|  (     /   Amazon Linux AMI
      ___|\___|___|

https://aws.amazon.com/amazon-linux-ami/2018.03-release-notes/
19 package(s) needed for security, out of 29 available
Run "sudo yum update" to apply all updates.

EEEEEEEEEEEEEEEEEEEE MMMMMMMM           MMMMMMMM RRRRRRRRRRRRRRR
E::::::::::::::::::E M:::::::M         M:::::::M R::::::::::::::R
EE::::EEEEEEEEE:::E M::::::::M       M::::::::M R:::::RRRRRR:::::R
  E::::E       EEEEE M:::::::::M     M:::::::::M RR::::R      R::::R
  E::::E             M::::::M:::M   M:::M::::::M   R:::R      R::::R
  E:::::EEEEEEEEEE   M:::::M M:::M M:::M M:::::M   R:::RRRRRR:::::R
  E::::::::::::::E   M:::::M  M:::M:::M  M:::::M   R::::::::::RR
  E:::::EEEEEEEEEE   M:::::M   M:::::M   M:::::M   R:::RRRRRR::::R
  E::::E             M:::::M    M:::M    M:::::M   R:::R      R::::R
  E::::E       EEEEE M:::::M     MMM     M:::::M   R:::R      R::::R
EE::::EEEEEEEE::::E M:::::M             M:::::M   R:::R      R::::R
E::::::::::::::::::E M:::::M             M:::::M RR::::R      R::::R
EEEEEEEEEEEEEEEEEEEE MMMMMMM             MMMMMMM RRRRRRR      RRRRRR

[hadoop@ip-172-31-90-14 ~]$
```

Steps to Prepare Input Files

- Copy files to your home directory & switch to the dir

```
$ cp -R /home/hadoop/WordCount .
$ cd WordCount
```

- Create your own folder on HDFS:

```
$ hadoop fs -mkdir /user/spark/[username]
```

- Copy input test files from local file system to your HDFS

```
$ hadoop fs -put input /user/spark/[username]/
```

- Show the content of the input file on HDFS

```
$ hadoop fs -cat /user/spark/[username]/input/hello.dat
```

Hands-on Lab: Spark

- spark-shell

```
[hadoop@ip-172-31-90-14 WordCount]$ spark-shell
Setting default log level to "WARN".
To adjust logging level use sc.setLogLevel(newLevel). For SparkR, use setLogLevel(newLevel).
19/12/06 15:48:20 WARN Client: Neither spark.yarn.jars nor spark.yarn.archive is set, falling
 SPARK_HOME.
Spark context Web UI available at http://ip-172-31-90-14.ec2.internal:4040
Spark context available as 'sc' (master = yarn, app id = application_1575647061394_0002).
Spark session available as 'spark'.
Welcome to
      ____              __
     / __/__  ___ _____/ /__
    _\ \/ _ \/ _ `/ __/  '_/
   /___/ .__/\_,_/_/ /_/\_\   version 2.4.4
      /_/

Using Scala version 2.11.12 (OpenJDK 64-Bit Server VM, Java 1.8.0_222)
Type in expressions to have them evaluated.
Type :help for more information.

scala>
```

- Show your output result
- Spark can also be written in Python and run on PySpark
- Reference: https://spark.apache.org/examples.html

Hands-on Lab: Spark

- Type WordCount scala code line-by-line in Spark Shell

```
val textFile = sc.textFile("/user/hadoop/[username]/input/hello.dat")
val counts = textFile.flatMap(line => line.split(" ")) .map(word =>
(word, 1)) .reduceByKey(_ + _)
counts.saveAsTextFile("/user/spark/[username]")
```

- Show your output result

```
[hadoop@ip-172-31-90-14 WordCount]$ hadoop fs -ls /user/spark/123456/
Found 3 items
-rw-r--r--   1 hadoop spark          0 2019-12-06 16:09 /user/spark/123456/_SUCCESS
-rw-r--r--   1 hadoop spark         20 2019-12-06 16:09 /user/spark/123456/part-00000
-rw-r--r--   1 hadoop spark          9 2019-12-06 16:09 /user/spark/123456/part-00001
[hadoop@ip-172-31-90-14 WordCount]$ hadoop fs -cat /user/spark/123456/part-00000
(hello,2)
(world,1)
[hadoop@ip-172-31-90-14 WordCount]$ hadoop fs -cat /user/spark/123456/part-00001
(back,1)
```

Spark Examples

- WordCount

HDFS location

```
val textFile = sc.textFile("<input_directory_path>")
val counts = textFile.flatMap(line => line.split(" ")) .map(word
=> (word, 1)) .reduceByKey(_ + _)
counts.saveAsTextFile("<input_directory_path>")
```

- Pi Estimation

```
val count = sc.parallelize(1 to NUM_SAMPLES).filter { _ =>
    val x = math.random
    val y = math.random x*x + y*y < 1 }.count()
println(s"Pi is roughly ${4.0 * count / NUM_SAMPLES}")
```

Spark Examples

- Prediction with Logistic Regression

```
// Every record of this DataFrame contains the label and
// features represented by a vector.
val df = sqlContext.createDataFrame(data).toDF("label", "features")
// Set parameters for the algorithm.
// Here, we limit the number of iterations to 10.
val lr = new LogisticRegression().setMaxIter(10)
// Fit the model to the data.
val model = lr.fit(df)
// Inspect the model: get the feature weights.
val weights = model.weights
// Given a dataset, predict each point's label, and show the results.
model.transform(df).show()
```

Custom key & value types

Combiner

Partitioner

GroupingComparator

SortComparator

ADVANCED PROG.

Custom Value Types

- *Value in* 3-dimensional coordinate

  struct point3d { float x; float y; float z; }

- Implement *Writable* interface
  - write: data serialization
  - readFields: data de-serialization

```
public class Point3D implements Writable {
    private float x; private float y; private float z;
    public Point3D(float x, float y, float z)  { this.x = x; this.y = y; this.z = z; }
    public void write(DataOutput out) throws IOException {
            out.writeFloat(x); out.writeFloat(y); out.writeFloat(z);
    }
    public void readFields(DataInput in) throws IOException
            { x = in.readFloat(); y = in.readFloat(); z = in.readFloat(); }
}
```

Custom Key Types

- *Key in* 3-dimensional coordinate

  struct point3d { float x; float y; float z; }

- Implement all functions in the ***writable*** interface
  - write(), readFields()
- Implement additional functions in the ***writablecomparable*** interface
  - compareTo(): used for **sorting**
    - Compares this object with the specified object for order. Returns a negative integer, zero, or a positive integer as this object is less than, equal to, or greater than the specified object.
  - hashCode(): used for **partitioning**

Custom Key Types

```
public class Point3D implements WritableComparable <Point3D> {
    private float x; private float y; private float z;
    public 3DPoint (){x=0.0f; y=0.0f; z=0.0f;}
    public void set(float x, float y, float z)  { this.x = x; this.y = y; this.z = z; }
    public float distanceFromOrigin() {
            return (float)Math.sqrt(x*x + y*y + z*z);
    }
    public int compareTo(Point3D other) {
            float myDistance = distanceFromOrigin();
            float otherDistance = other.distanceFromOrigin();
            return Float.compare(myDistance, otherDistance);
    }
    public int hashCode() {
            return Float.floatToIntBits(x) ^ Float.floatToIntBits(y) ^
            Float.floatToIntBits(z);
    }
    // overwrite other methods in Writable interface:  write & readFields
}
```

Use Case Example

- Given a list of 3D-coordinates, sort them in order in each of the output file:
  - **key type**: Point3D
  - **Value type**: NullWritable
  - **Mapper**: map each line to {<x,y,z>, Null}
  - **Reducer**: write key to file

➔Data is sorted automatically by Key in the MapReduce process

Point3D Sorting Example

```
public class TestPoint3D {
 public static class TokenizerMapper
     extends Mapper<Object, Text, Point3D, NullWritable>
 {
  private Point3D point = new Point3D();
  public void map(Object key, Text value, Context context
              ) throws IOException, InterruptedException {
     String line  = value.toString();
     String[] tokens = line.split(",");
     float x = Float.parseFloat(tokens[0]);
     float y = Float.parseFloat(tokens[1]);
     float z = Float.parseFloat(tokens[2]);
     point.set(x,y,z);
     context.write(point, NullWritable.get());
    }
 }
```

Input file:
0,0,0
1,0,2
4,4,4
2,2,2

Output file:
0,0,0
1,0,2
2,2,2
4,4,4

```
main():
   job.setOutputKeyClass(Point3D.class);
   job.setOutputValueClass(NullWritable.class);
   job.setMapClass(Tokenizer.class);
```

Custom key & value types

Combiner

Partitioner

GroupingComparator

SortComparator

ADVANCED PROG.

Map Phase: Partitioner

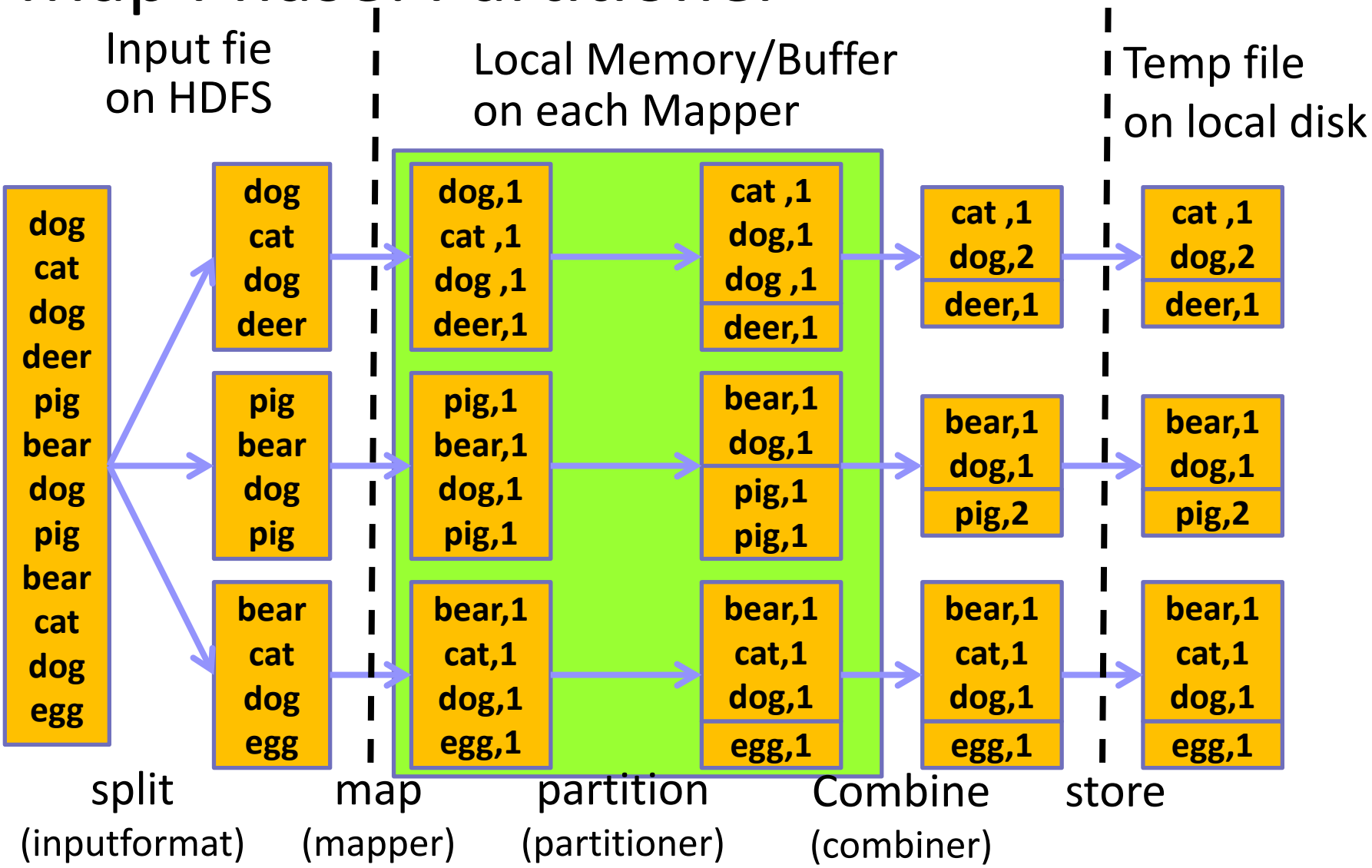

Map Phase: Partitioner

- Partitioner decides which intermediate (K,V) pair is sent to which reducer
- The total number of partitions is the same as the number of reduce tasks for the job.
- Default partitioner: "**HashPartitioner**"
- Write a custom Partitioner:

```
public class MyPartitioner implements Partitioner<Point3D, Writable> {
    public int getPartition(Point3D key, Writable value, int numPart) {
        return Math.abs(key.hashCode()) % numPart;
    }
}
```

Total number of partitions

```
main(){
  job.setPartitionerClass(MyPartitioner.class);
}
```

Map Phase: Combiner

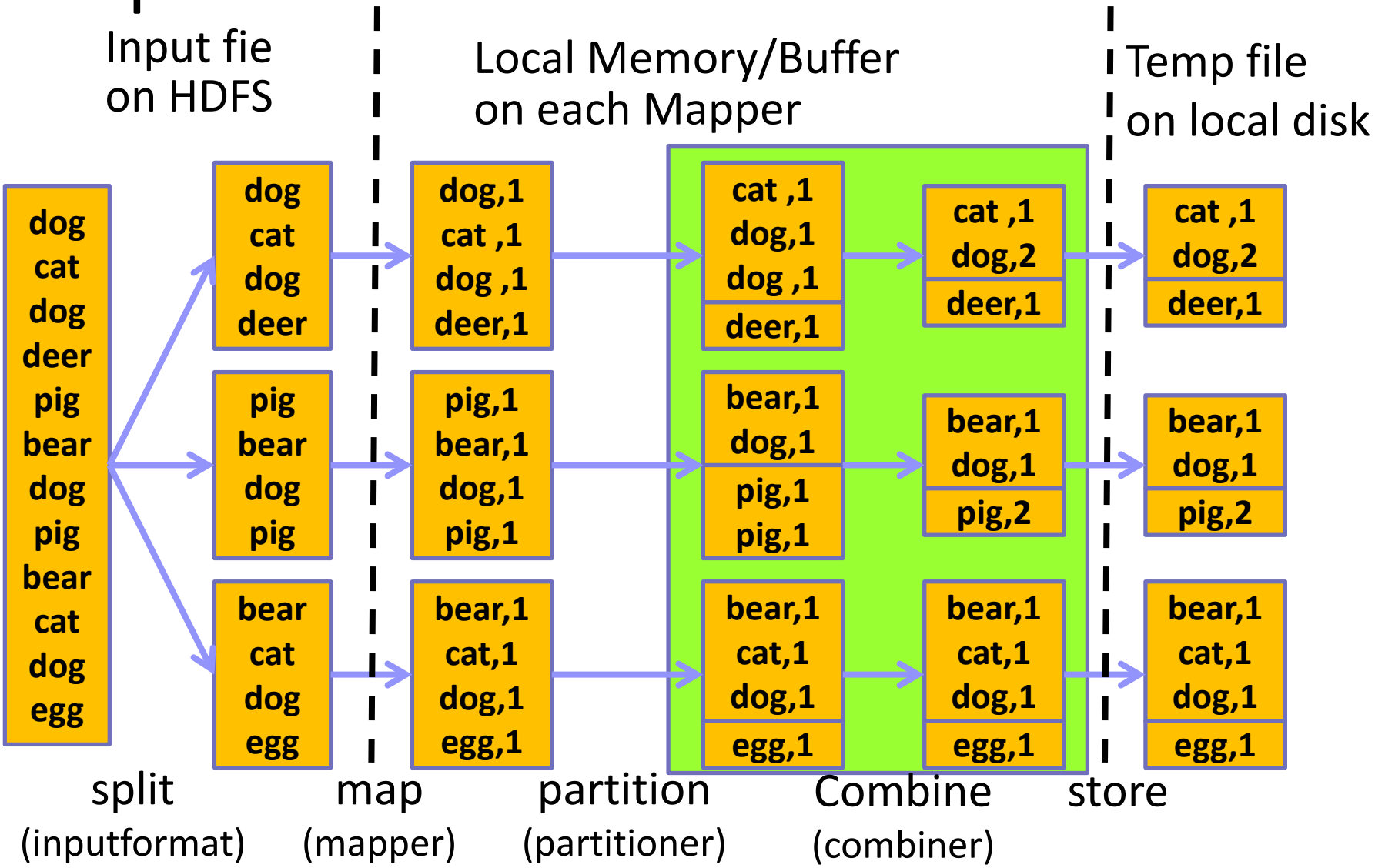

Map Phase: Combiner

- An OPTIONAL **optimization** step in mapping phase
  - Combiner combines map-outputs before being sent to the reducers ➔ reduce intermediate file size and transfer time
  - Combiner could be run **many** or **ZERO** time ➔ program results can't depend on combiner
  - <K,V> data type must be the **same** for INPUT & OUTPUT
    - Reducer can emit a different output type to file
  - Reducer and combiner could be but NOT ALWAYS the same
    - E.g.: compute the avg of each key
    - MEAN({1,2,3,4,5}) ≠ MEAN(MEAN({1,2}),MEAN({3,4,5}))
  - Some problem can be difficult to apply combiner
    - E.g.: Find the median value of each key

Custom key & value types

Combiner

Partitioner

GroupingComparator

SortComparator

ADVANCED PROG.

Reduce Phase: sortComparator

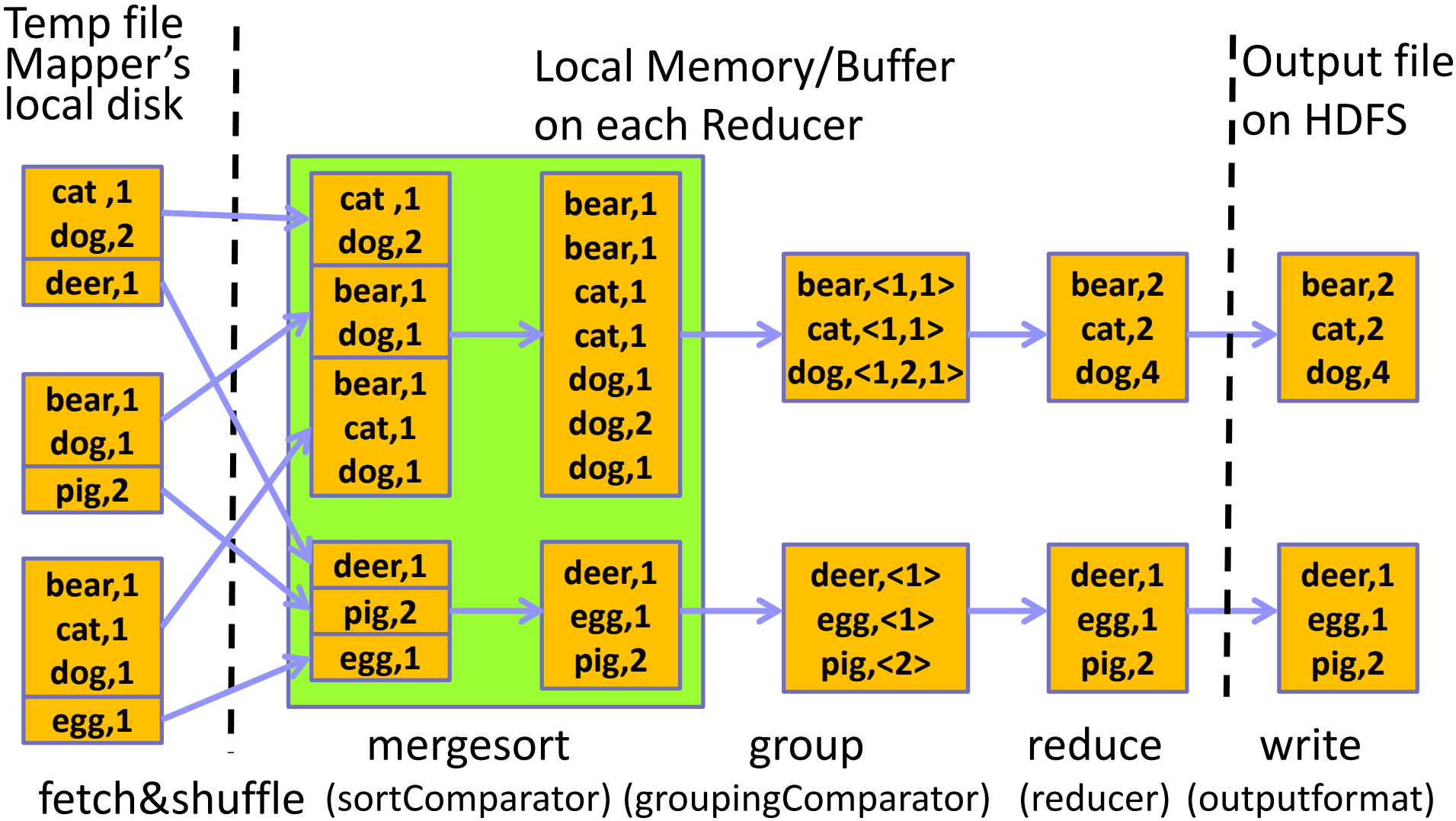

Reduce Phase: sortComparator

- <K,V> pairs are sorted by ***key*** using a comparator class called the **sortComparator**
  - The comparator can be set by "**job.setSortComparatorClass()**"
  - The comparator must implement the "***rawComparator***" **interface** *or extend* "***writeComparator***" ***class***
    - Override the function: **compare**
- Implementation:
  - Mergesort is used by the framework to effectively merge the output from mappers, and sort the result in one stage

Reduce Phase: sortComparator

- Let keys in the form of <string1>:<string2>
- Sort keys in the ascending order of <string1>

```
public static class MySortComprator extends WritableComparator {
    protected MySortComprator() { super(Text.class, true); }
    public int compare(WritableComparable w1,
                       WritableComparable w2) {
        Text t1 = (Text) w1;
        Text t2 = (Text) w2;
        String[] t1Items = t1.toString().split(":");
        String[] t2Items = t2.toString().split(":");
        return t1Items[0].compareTo(t2Items[0]);
    }
}
```

```
main(){
    job.setSortComparatorClass(MySortComparator.class);
}
```

Reduce Phase: groupingComparator

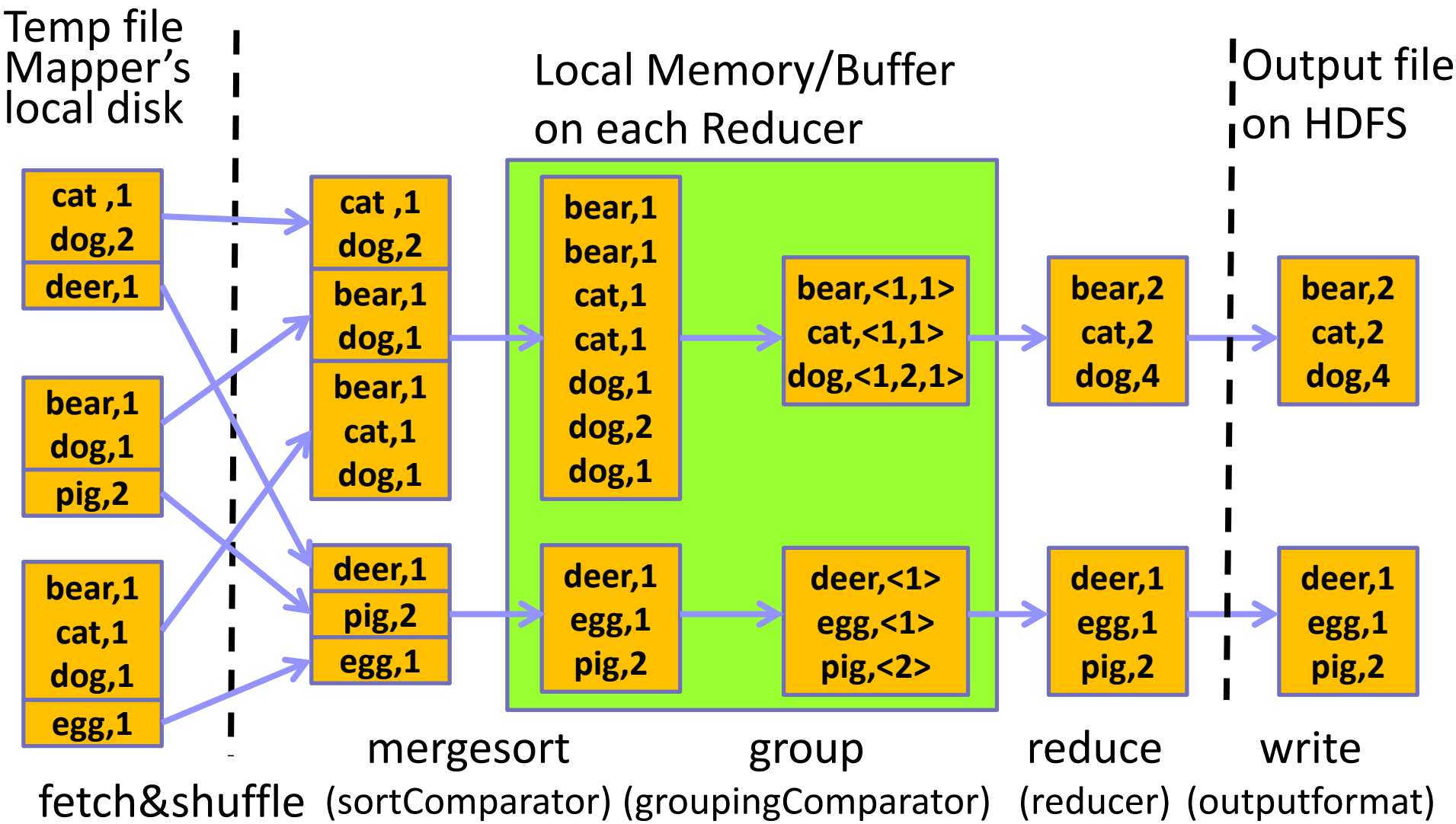

Reduce Phase: groupingComparator

- <K,V> pairs are grouped together if their ***keys*** are compared as equal by using a comparator called **groupingComparator**
  - The comparator can be set by "**job.setGroupingComparatorClass()**"
  - The comparator must implement the "***rawComparator***" **interface** *or extend* "***writeComparator***" ***class***
    - Override the function: **compare**

- If multiple keys in the same group, "**sortComparator**" is used to decide the key for the group
  - Input: <A1, V1>, <A2, V2>, <A3, V3>, <B1, V4>, <B2, V5>
  - Grouping comparator to just compare the first letter
  - Output: (A1, {V1,V2,V3}); (B1, {V4,V5});

Reduce Phase: groupingComparator

- Only compare the first letter

```
public static class  MyGroupComp extends WritableComparator {
    protected MyGroupCom() { super(Text.class, true); }
    public int compare(WritableComparable w1,
                       WritableComparable w2) {
        Text t1 = (Text) w1;            Text t2 = (Text) w2;
        int t1char = t1.charAt(0);      int t2char = t2.charAt(0);
        if (t1char < t2char) return -1;
        else if (t1char > t2char) return 1;
        else return 0;
    }
}
```

```
main(){
   job.setGroupingComparatorClass(MyGroupComp.class);
}
```

SECONDARYSORT EXAMPLE

SecondarySort

- What is SecondarySort?
  - **Sorting values** associated with a key in the reduce phase
- Examples:
  - Input: A dump of the temperature data with 4 columns
    year, month, day, daily_temperature

```
2012, 01, 01, 5
2012, 01, 02, 45
2012, 01, 03, 35
…
2001, 11, 01, 46
2001, 11, 02, 47
2001, 11, 03, 48
```

  - Output: The temperature for every
    year-month with the values sorted

```
2012-01: 5, 35, 45
2001-11, 46, 47, 48
….
```

SecondarySort

- Soltion1:
  - having the reducer **buffer all of the values** for a given *key*
  - then doing an **in-reducer sort** on the values
  - ➔might cause the reducer to run out of memory
- Solution2:
  - Trick MapReduce to sort the reducer values
  - *Value-to-Key Conversion* design pattern: "Creating a **composite key** by adding a part of, or the entire value to, the natural key to achieve your sorting objectives"

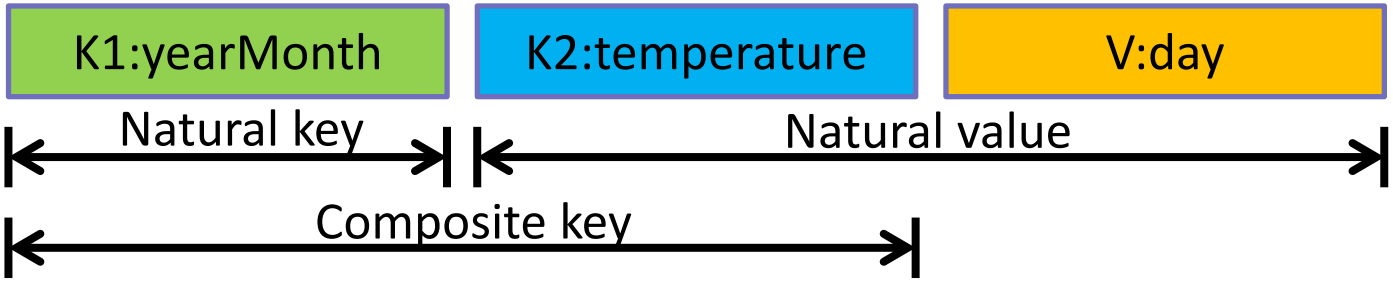

SecondarySort

- Implementation details:
  - Map Output Key: {yearMonth}+{temperature}
  - Map Output Value: temperature
  - Partitioner: by yearMonth
  - sortComparator: by yearMonth and then ascending temp.
  - groupingComparator: by yearMonth

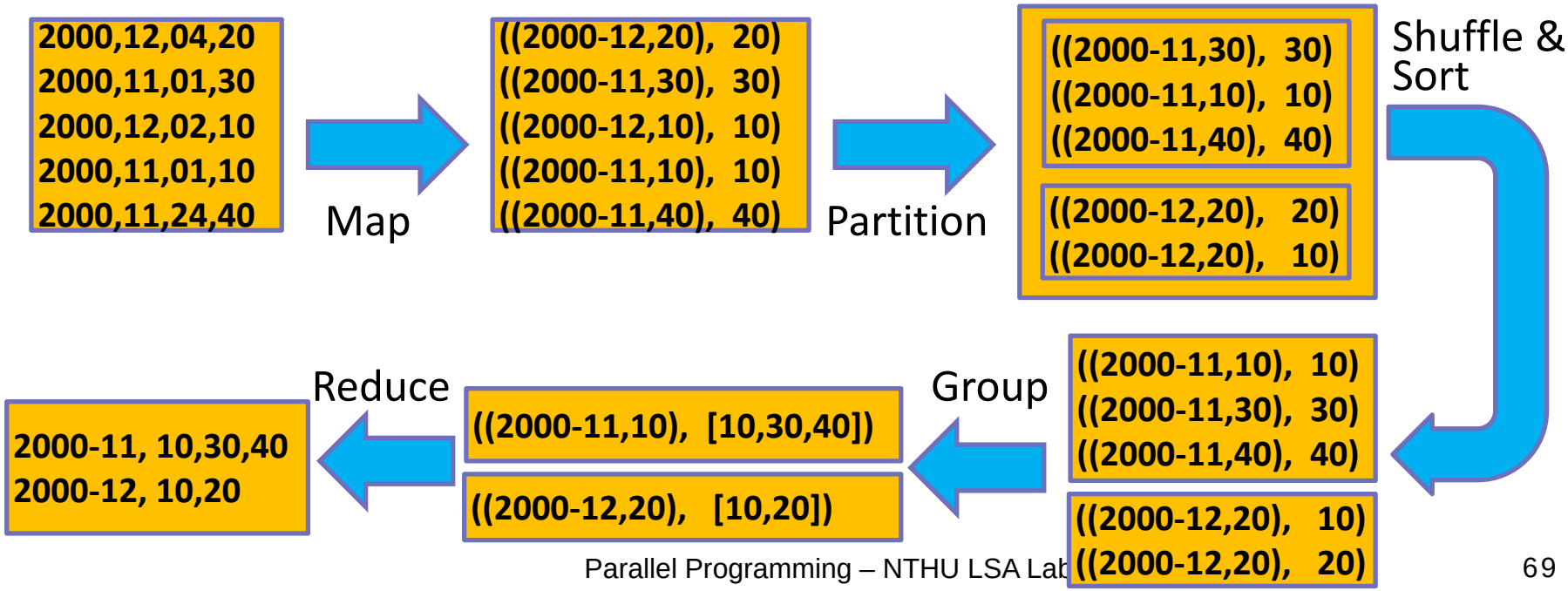

Reference

- Distributed system lecture slides from Gregory Kesden
- Jeffrey Dean and Sanjay Ghemawat. MapReduce: Simplified Data Processing on Large Clusters. Proceedings of the 6th Symposium on Operating System Design and Implementation (OSDI 2004), pages 137-150
- Hadoop tutorial:
  - https://hadoop.apache.org/docs/current/hadoop-mapreduce-client/hadoop-mapreduce-client-core/MapReduceTutorial.html