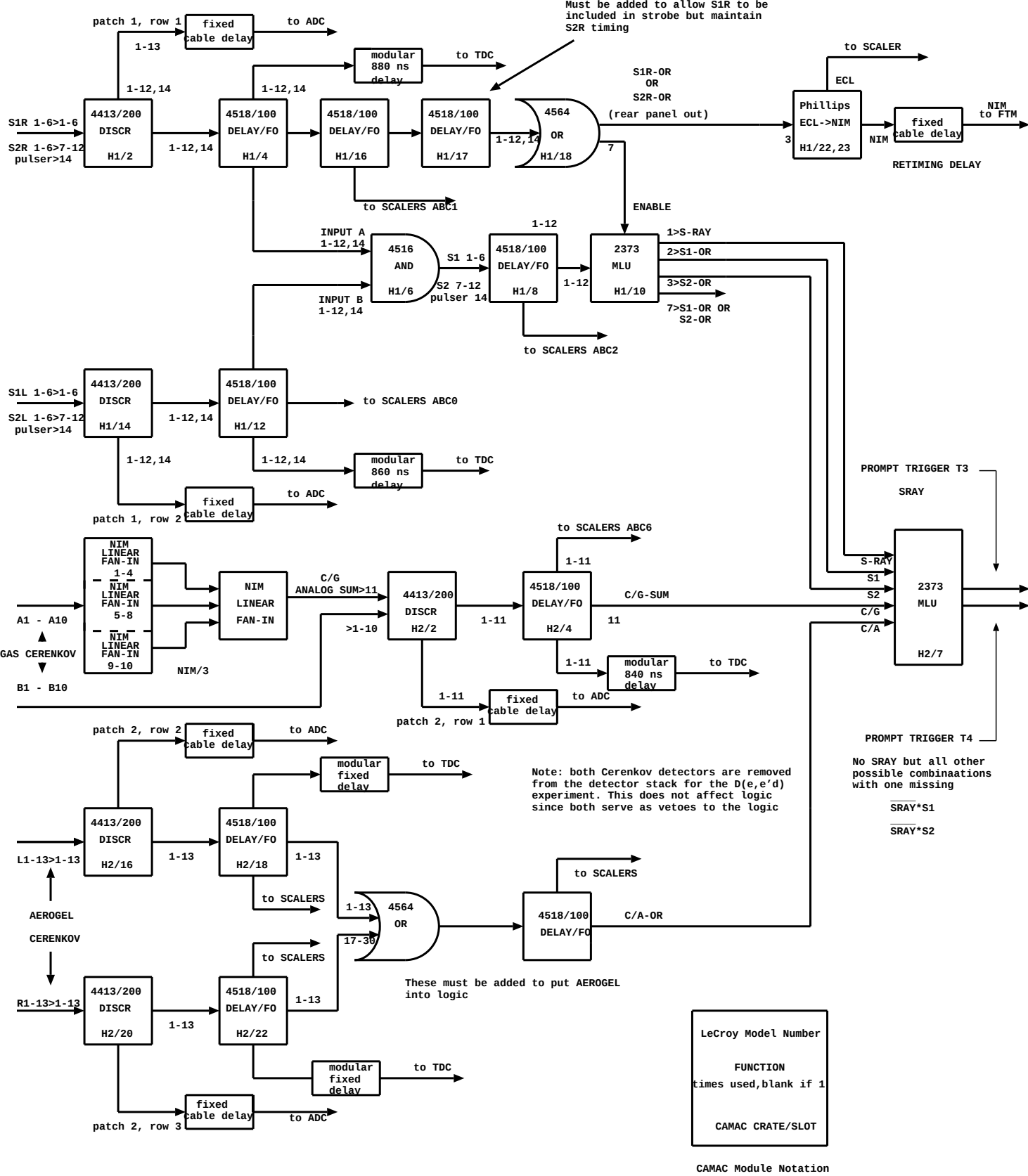

Note: The FPP is not included in TRIGGER LOGIC

Note: The modular delays are NIM LD1200

HALL A HADRON PROMPT TRIGGER DESIGN 11/13/97