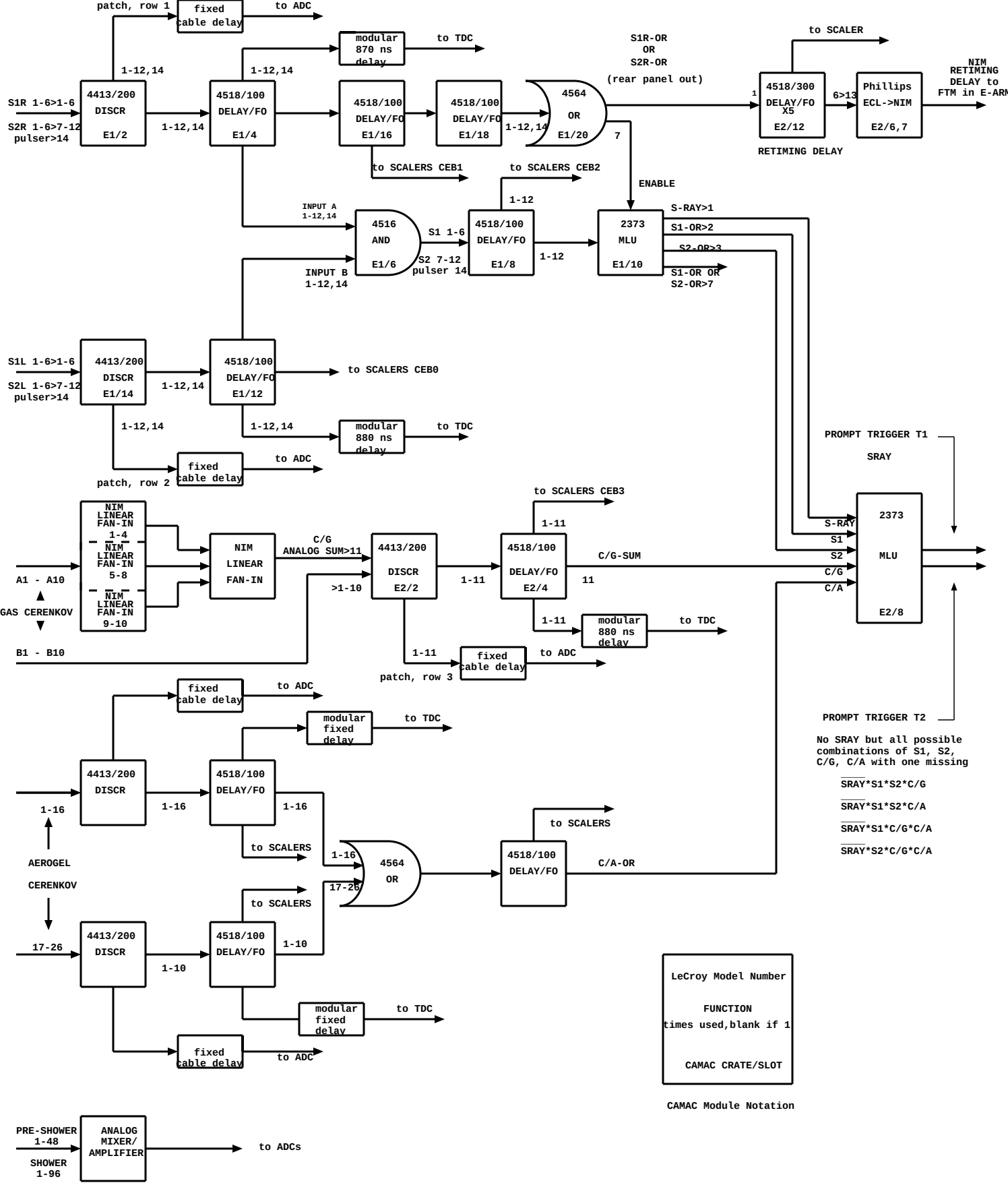

HALL A ELECTRON PROMPT TRIGGER DESIGN 11/13/97